Company: Joyoung International Trading Co.,Limited
Atten： Smiling
Mobile/WhatsApp/Wechat:+86 18050035902
Email: info@htechplc.com
Website: https://www.joyoungintl.com/

Bailey® infi 90®

E96-322

Instruction

Hydraulic Servo Module
(IMHSS03)

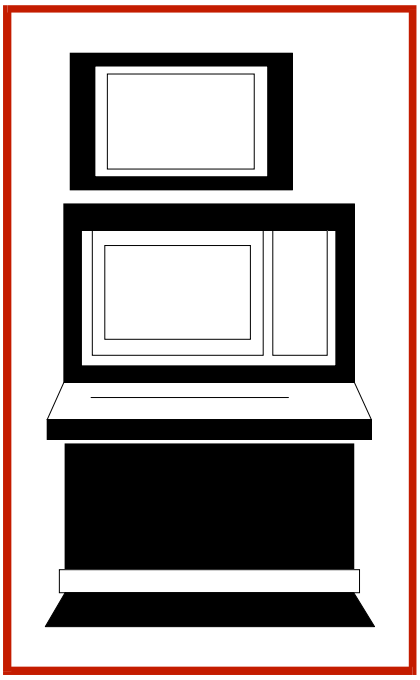

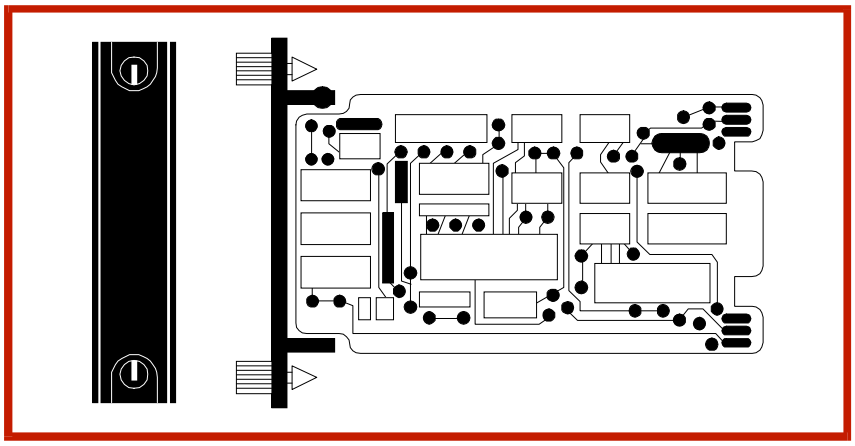

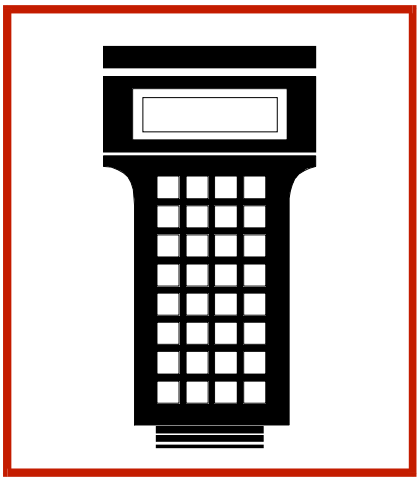

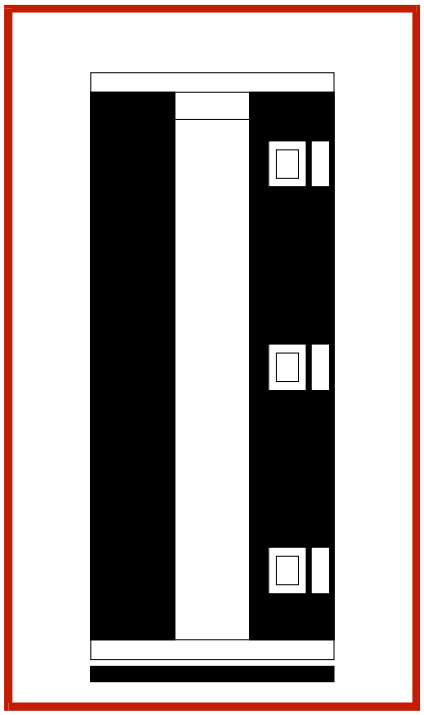

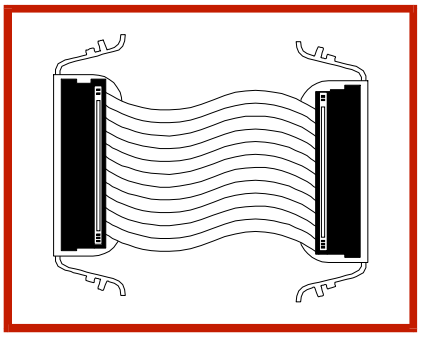

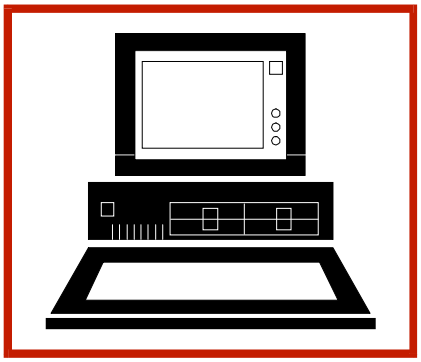

WARNING notices as used in this instruction apply to hazards or unsafe practices that could result in personal injury or death.

CAUTION notices apply to hazards or unsafe practices that could result in property damage.

NOTES highlight procedures and contain information that assists the operator in understanding the information contained in this instruction.

WARNING

INSTRUCTION MANUALS

DO NOT INSTALL, MAINTAIN, OR OPERATE THIS EQUIPMENT WITHOUT READING, UNDERSTANDING, AND FOLLOWING THE PROPER **Elsag Bailey** INSTRUCTIONS AND MANUALS; OTHERWISE, INJURY OR DAMAGE MAY RESULT.

RADIO FREQUENCY INTERFERENCE

MOST ELECTRONIC EQUIPMENT IS INFLUENCED BY RADIO FREQUENCY INTERFERENCE (RFI). CAUTION SHOULD BE EXERCISED WITH REGARD TO THE USE OF PORTABLE COMMUNICATIONS EQUIPMENT IN THE AREA AROUND SUCH EQUIPMENT. PRUDENT PRACTICE DICTATES THAT SIGNS SHOULD BE POSTED IN THE VICINITY OF THE EQUIPMENT CAUTIONING AGAINST THE USE OF PORTABLE COMMUNICATIONS EQUIPMENT.

POSSIBLE PROCESS UPSETS

MAINTENANCE MUST BE PERFORMED ONLY BY QUALIFIED PERSONNEL AND ONLY AFTER SECURING EQUIPMENT CONTROLLED BY THIS PRODUCT. ADJUSTING OR REMOVING THIS PRODUCT WHILE IT IS IN THE SYSTEM MAY UPSET THE PROCESS BEING CONTROLLED. SOME PROCESS UPSETS MAY CAUSE INJURY OR DAMAGE.

AVERTISSEMENT

MANUELS D'OPÉRATION

NE PAS METTRE EN PLACE, RÉPARER OU FAIRE FONCTIONNER L'ÉQUIPEMENT SANS AVOIR LU, COMPRIS ET SUIVI LES INSTRUCTIONS RÉGLEMENTAIRES DE **Elsag Bailey**. TOUTE NÉGLIGENCE À CET ÉGARD POURRAIT ÊTRE UNE CAUSE D'ACCIDENT OU DE DÉFAILLANCE DU MATÉRIEL.

PERTURBATIONS PAR FRÉQUENCE RADIO

LA PLUPART DES ÉQUIPEMENTS ÉLECTRONIQUES SONT SENSIBLES AUX PERTURBATIONS PAR FRÉQUENCE RADIO. DES PRÉCAUTIONS DEVRONT ÊTRE PRISES LORS DE L'UTILISATION DU MATÉRIEL DE COMMUNICATION PORTATIF. LA PRUDENCE EXIGE QUE LES PRÉCAUTIONS À PRENDRE DANS CE CAS SOIENT SIGNALÉES AUX ENDROITS VOULUS DANS VOTRE USINE.

PERTURBATIONS DU PROCÉDÉ

L'ENTRETIEN DOIT ÊTRE ASSURÉ PAR UNE PERSONNE QUALIFIÉE EN CONSIDÉRANT L'ASPECT SÉCURITAIRE DES ÉQUIPEMENTS CONTRÔLÉS PAR CE PRODUIT. L'AJUSTEMENT ET/OU L'EXTRACTION DE CE PRODUIT PEUT OCCASIONNER DES À-COUPS AU PROCÉDÉ CONTRÔLE LORSQU'IL EST INSÉRÉ DANS UNE SYSTÈME ACTIF. CES À-COUPS PEUVENT ÉGALEMENT OCCASIONNER DES BLESSURES OU DES DOMMAGES MATÉREILS.

NOTICE

The information contained in this document is subject to change without notice.

Elsag Bailey, its affiliates, employees, and agents, and the authors and contributors to this publication specifically disclaim all liabilities and warranties, express and implied (including warranties of merchantability and fitness for a particular purpose), for the accuracy, currency, completeness, and/or reliability of the information contained herein and/or for the fitness for any particular use and/or for the performance of any material and/or equipment selected in whole or part with the user of/or in reliance upon information contained herein. Selection of materials and/or equipment is at the sole risk of the user of this publication.

This document contains proprietary information of Elsag Bailey, Elsag Bailey Process Automation, and is issued in strict confidence. Its use, or reproduction for use, for the reverse engineering, development or manufacture of hardware or software described herein is prohibited. No part of this document may be photocopied or reproduced without the prior written consent of Elsag Bailey.

Preface

The IMHSS03 Hydraulic Servo Module is a valve position control module used in an INFI 90® system to control the speed of a turbine. It interfaces a servo valve or an I/H converter to an IMMFP01, IMMFP02 or IMMFP03 Multi-Function Processor Module. The multi-function processor (MFP) module controls the position of a steam or gas turbine throttle valve by sending a position demand to the hydraulic servo (HSS) module. The HSS module drives its outputs to open or close the throttle valve to match the position demand. The MFP module uses the IMFCS01 Frequency Counter Module to measure the turbine speed. The frequency counter module measures turbine speed by counting and timing pulses from a magnetic pickup on the turbine shaft. The MFP module uses this count to calculate turbine speed and calculate a new demand based on a set point.

The IMHSS03 module is a compatible replacement of the IMHSS01 or IMHSS02 module and offers improved performance. The IMHSS03 module automatically tunes its demodulator gain, offering a more optimal response.

This instruction provides information and instructions on IMHSS03 module installation, calibration and tuning, operation, maintenance and troubleshooting. Anyone installing, calibrating, tuning or operating the IMHSS03 module should read and understand this instruction.

® INFI 90 is a registered trademark of Elsag Bailey Process Automation.

List of Effective Pages

Total number of pages in this instruction is 90, consisting of the following:

Page No.	Change Date
Preface	Original
List of Effective Pages	Original
iii through ix	Original
1-1 through 1-8	Original
2-1 through 2-10	Original
3-1 through 3-11	Original
4-1 through 4-7	Original
5-1 through 5-3	Original
6-1 through 6-15	Original
7-1 through 7-4	Original
8-1 through 8-2	Original
9-1	Original
A-1 through A-4	Original
B-1 through B-6	Original
C-1 through C-3	Original
D-1 through D-2	Original
E-1 through E-3	Original
Index-1 through Index-2	Original

When an update is received, insert the latest changed pages and dispose of the superseded pages.

NOTE: On an update page, the changed text or table is indicated by a vertical bar in the outer margin of the page adjacent to the changed area. A changed figure is indicated by a vertical bar in the outer margin next to the figure caption. The date the update was prepared will appear beside the page number.

Safety Summary

GENERAL WARNINGS	**Equipment Environment** All components, whether in transportation, operation or storage, must be in a noncorrosive environment. **Electrical Shock Hazard During Maintenance** Disconnect power or take precautions to insure that contact with energized parts is avoided when servicing. **Special Handling** This module uses electrostatic sensitive devices.

SPECIFIC WARNINGS	Only qualified personnel should install the throttle valve, hydraulic actuator, servo valve and linear variable differential transformer. Improper installation can cause damage to plant equipment, reduce plant performance and compromise the safety of plant personnel. (p. 3-2) Disconnect power before installing dipshunts on the module mounting unit backplane. Failure to do so will result in contact with cabinet areas that could cause severe or fatal shock. (p. 3-10) There are exposed electrical connections inside the cabinet. These exposed electrical connections present a shock hazard that can cause injury or death. (p. 7-2) Never clean electrical parts or components with live power present. Doing so exposes you to an electrical shock hazard. (p. 7-3) Wear eye protection whenever working with cleaning solvents. When removing solvents from printed circuit boards using compressed air, injury to the eyes could result from splashing solvent as it is removed from the printed circuit board. (p. 7-3)

SPECIFIC CAUTIONS	Only qualified personnel should configure these dipswitches. Damage or misoperation could occur if dipswitches are improperly configured. (p. 3-4)

Sommaire de Sécurité

AVERTISSEMENTS D'ORDRE GÉNÉRAL	**Environnement de l'équipement** Ne pas soumettre les composants à une atmosphère corrosive lors du transport, de l'entreposage ou l'utilisation. **Possibilité de chocs électriques durant l'entretien** Débrancher l'alimentation ou prendre les précautions pour éviter tout contact avec des composants sous tension durant l'entretien. **Précautions de manutention** Ce module contient des composants sensible aux décharges électrostatiques.

AVERTISSEMENTS D'ORDRE SPÉCIFIQUE	Seulement un personnel qualifié devrait effectuer l'installation de la vanne de réglage, de l'actuateur hydraulique, de la servo-vanne, et du transformateur à différentiel linéaire variable. Une mauvaise installation peut causer des dommages à l'équipement, peut réduire la performance de l'usine et peut compromettre la sécurité du personnel. (p. 3-22) Interrompez l'alimentation avate d'installer des dipshunts sur le fond de panier du châssis de montage des modules. Sinon, tout contact avec cette zone entraîne des risques d'électrocution sérieuse ou fatale. (p. 3-10) L'intérieur de cette armoire contient des bornes électriques qui sont à découvert. Ces bornes électriques à découvert constituent un resque de choc qui pourrait causer blessure ou même la mort. (p. 7-2) Ne jamais nettoyer des pièces ou composants électriques dont les circuits sont sous tension; les circuits alimentés pourraient causer un choc électrique. (p. 7-3) Des lunettes de protection devraient être portées lors de travail avec des solvants nettoyants. Lorsqu'on enlève les solvants des circuits imprimés à l'aide d'air comprimé, les éclaboussures de solvant pourraient causer des blessures aux yeux. (p. 7-3)

ATTENTIONS D'ORDRE SPÉCIFIQUE	Seulement un personnel qualifié devrait effectuer l'installation, la configuration et le réglage du module. Un mauvais fonctionnement ou des dommages au module ou à l'équipement d'usine pourrait se produire si les mini-interrupteurs ou les cavaliers étaient mal configurés. (p. 3-4)

Table of Contents

Page

SECTION 1 - INTRODUCTION 1-1
- OVERVIEW 1-1
- INTENDED USER 1-1
- HSS MODULE DESCRIPTION 1-1
- HSS MODULE APPLICATION 1-1
- FEATURES 1-2
- INSTRUCTION CONTENT 1-3
- HOW TO USE THIS INSTRUCTION 1-4
- REFERENCE DOCUMENTS 1-4
- NOMENCLATURE 1-5
- GLOSSARY OF TERMS AND ABBREVIATIONS 1-5
- SPECIFICATIONS 1-6

SECTION 2 - DESCRIPTION AND OPERATION 2-1
- INTRODUCTION 2-1
- CONTROL LOOP OPERATION 2-1
  - HSS Module 2-1
  - FCS Module 2-3
  - MFP Module 2-3
- HSS MODULE OPERATION 2-4
- HSS MODULE CIRCUITRY 2-5
  - I/O Expander Bus Interface 2-5
  - Status and Data Buffers 2-6
  - Microprocessor 2-7
  - Position Demand and Output 2-7
    - Digital-to-Analog Converter 2-8
    - Position Error 2-8
    - Servo Amplifier 2-8
    - Dither Oscillator 2-8
  - Position Feedback 2-8
    - Demodulator 2-8
    - Analog-to-Digital Converter 2-9
    - LVDT Oscillator 2-9
  - Digital I/O 2-10

SECTION 3 - INSTALLATION 3-1
- INTRODUCTION 3-1
- SPECIAL HANDLING 3-1
- UNPACKING AND INSPECTION 3-2
- INSTALLING THE PROCESS HARDWARE 3-2
- INSTALLING THE TERMINATION UNIT OR MODULE 3-2
  - NTHS03 Termination Unit Installation 3-3
  - NIDI01 Termination Module Installation 3-3
  - NTDI01 Termination Unit Installation 3-4
- INITIAL IMHSS03 DIPSWITCH SETTINGS 3-4
  - Dipswitch S1 - I/O Expander Bus Address 3-4
  - Dipswitch S2 - Demodulator Gain 3-5
  - Dipswitch S3 - Controller Gain 3-6
  - Dipswitch S4 - LVDT Oscillator Frequency 3-7
  - Dipswitch S5 - Dither and LVDT Oscillator 3-7
- JUMPER SETTINGS 3-8
- IMHSS03 MODULE INSTALLATION 3-10

Table of Contents (continued)

Page

SECTION 3 - INSTALLATION *(continued)*
FUNCTION CODE 55 CONFIGURATION 3-11
FUNCTION CODE 150 CONFIGURATION 3-11

SECTION 4 - CALIBRATION 4-1
INTRODUCTION 4-1
NULL CHECK 4-1
AUTOMATIC TUNING (FUNCTION CODE 55) 4-2
Demodulator Gain 4-3
Initial Calibration (Function Code 55) 4-4
MANUAL TUNING (FUNCTION CODE 55) 4-5
Demodulator Gain 4-5
Controller Gain 4-7

SECTION 5 - OPERATING PROCEDURES 5-1
INTRODUCTION 5-1
FACEPLATE LEDS 5-1
START-UP AND NORMAL OPERATION 5-2
HARD MANUAL MODE OPERATION 5-2
TURBINE TRIP 5-3

SECTION 6 - TROUBLESHOOTING 6-1
INTRODUCTION 6-1
IMHSS03 FACEPLATE LEDS 6-1
DIAGNOSTICS 6-2
DIAGNOSTIC DIPSWITCH SELECTION 6-2
ALARM AND EXCEPTION REPORTING 6-4
FUNCTION CODE 55 PROBLEM REPORTS 6-4
FUNCTION CODE 150 PROBLEM REPORTS 6-6
TROUBLESHOOTING HARDWARE FAILURES 6-6
OFF-LINE FAILURE 6-8
ON-LINE FAILURE 6-13
Module Failure 6-13
Restoring Operation 6-13

SECTION 7 - MAINTENANCE 7-1
INTRODUCTION 7-1
PREVENTIVE MAINTENANCE SCHEDULE 7-1
EQUIPMENT REQUIRED 7-2
PREVENTIVE MAINTENANCE PROCEDURES 7-2
Checking Connections 7-2
Printed Circuit Board Cleaning 7-3
General Cleaning and Washing 7-3
Edge Connector Cleaning 7-4
Cleaning Female Edge Connectors 7-4
LVDT and Hydraulic Actuator Calibration 7-4

SECTION 8 - REPAIR/REPLACEMENT PROCEDURES 8-1
INTRODUCTION 8-1
MODULE REPLACEMENT 8-1
TERMINATION UNIT/MODULE REPLACEMENT 8-2

Table of Contents (continued)

Page

SECTION 9 - SUPPORT SERVICES 9-1
INTRODUCTION 9-1
REPLACEMENT PARTS AND ORDERING INFORMATION 9-1
TRAINING 9-1
TECHNICAL DOCUMENTATION 9-1

APPENDIX A - QUICK REFERENCE GUIDE A-1
INTRODUCTION A-1
IMHSS03 DIPSWITCH AND JUMPER SETTINGS A-1
LED STATES A-4

APPENDIX B - FUNCTION CODE 150 CALIBRATION B-1
INTRODUCTION B-1
INITIAL CALIBRATION B-1
ANALOG CONTROL TUNING THEORY B-3
TUNING THE CONTROLLER GAIN B-4
ON-LINE CALIBRATION B-5

APPENDIX C - NTHS03 TERMINATION UNIT C-1
INTRODUCTION C-1
QUICK REFERENCE C-1

APPENDIX D - NIDI01 TERMINATION MODULE D-1
INTRODUCTION D-1
QUICK REFERENCE D-1

APPENDIX E - NTDI01 TERMINATION UNIT E-1
INTRODUCTION E-1
QUICK REFERENCE E-1

List of Figures

No.	Title	Page
1-1.	HSS Module within the INFI 90 Hierarchy	1-2
2-1.	Turbine Speed Control Loop	2-2
2-2.	Functional Block Diagram	2-5
2-3.	Position Demand and Output Circuit	2-7
2-4.	Position Feedback Circuit	2-9
2-5.	Typical Digital Input Circuit	2-10
3-1.	IMHSS03 Circuit Board Layout	3-5
3-2.	IMHSS03 Jumper Layout	3-10
5-1.	Faceplate LEDs	5-1
6-1.	Diagnostic LED Display	6-1
6-2.	Diagnostic Dipswitch Settings	6-3
6-3.	Off-Line Failure Troubleshooting Flowchart	6-8
6-4.	On-Line Failure Troubleshooting Flowchart	6-14
C-1.	NTHS03 Circuit Board Layout	C-1
C-2.	NTHS03 I/O Terminal Block Assignments	C-2
C-3.	NTHS03 Termination Cable Connection	C-3
D-1.	NIDI01 Circuit Board Layout	D-1
D-2.	NIDI01 I/O Terminal Block Assignments	D-2
D-3.	NIDI01 Termination Cable Connection	D-2
E-1.	NTDI01 Circuit Board Layout	E-1
E-2.	NTDI01 I/O Terminal Block Assignments	E-3
E-3.	NTDI01 Termination Cable Connection	E-3

List of Tables

No.	Title	Page
1-1.	Reference Documents	1-4
1-2.	Nomenclature	1-5
1-3.	Glossary of Terms and Abbreviations	1-5
1-4.	Specifications	1-6
3-1.	Dipswitch S1, I/O Expander Bus Address Example Settings	3-5
3-2.	Dipswitch S2, Demodulator Gain	3-6
3-3.	Dipswitch S3, Controller Gain	3-6
3-4.	Dipswitch S4, LVDT Oscillator Frequency	3-7
3-5.	Dipswitch S5, Dither Oscillator Frequency/Amplitude and LVDT Oscillator Amplitude	3-8
3-6.	Jumpers J1 through J31	3-8
5-1.	LED States	5-2
6-1.	Diagnostic Test ID Numbers and Dipswitch S2 Settings	6-3
6-2.	Function Code 55 Module Problem Report	6-5
6-3.	Function Code 150 Module Problem Report	6-7
6-4.	Function Code 150 Output Errors	6-7
6-5.	Troubleshooting Off-Line Failures	6-11
6-6.	Troubleshooting On-Line Failures	6-15
7-1.	Preventive Maintenance Schedule	7-1
8-1.	Spare Parts List	8-1
A-1.	Dipswitch S1, I/O Expander Bus Address Example Settings	A-1
A-2.	Dipswitch S2, Demodulator Gain	A-1
A-3.	Dipswitch S3, Controller Gain	A-2
A-4.	Dipswitch S4, LVDT Oscillator Frequency	A-2
A-5.	Dipswitch S5, Dither Oscillator Frequency/Amplitude and LVDT Oscillator Amplitude	A-2
A-6.	Jumpers J1 through J31	A-3
A-7.	LED States	A-4
B-1.	Controller Tuning Log	B-6
C-1.	NTHS03 Jumper Settings	C-2
C-2.	NTHS03 Dipshunt Settings	C-2
E-1.	NTDI01 Dipshunt Settings	E-2

SECTION 1 - INTRODUCTION

OVERVIEW

The IMHSS03 Hydraulic Servo Module is a valve position control module. It provides an interface through which a processor module can control a hydraulic actuator via a servo valve. By regulating the current to the servo valve, it initiates a change in actuator position. A linear variable differential transformer (LVDT) provides actuator position feedback to the hydraulic servo (HSS) module. Typical uses for the HSS module are positioning of steam turbine throttle and control valves, gas turbine fuel valves, inlet guide vanes and nozzle angle.

INTENDED USER

Anyone who installs, operates and maintains the HSS module should read and understand this instruction before placing it into service. Installation, troubleshooting and replacement requires a technician or engineer with experience handling electronic circuitry and analog control tuning experience. Additionally, experience with hydraulic actuators, servo valves, I/H converters and associated hardware installation and calibration is required. Operation and maintenance requires an individual who knows turbine start-up and plant operating procedures.

HSS MODULE DESCRIPTION

The HSS module is an intelligent I/O module with microprocessor, memory and communication circuitry. The module consists of a printed circuit board attached to a faceplate. Nine status LEDs (one red/green LED and eight red LEDs) are visible through the faceplate. The HSS module occupies one slot in an INFI 90® module mounting unit.

HSS MODULE APPLICATION

The HSS module interfaces a processor module to a servo valve or I/H converter, providing control (manual or automatic) of a hydraulic actuator. The hydraulic actuator positions a gas turbine fuel valve or steam governor valve. As the fuel or steam valve opens or closes, it regulates fuel or steam flow to the turbine, thus controlling the turbine speed. Figure 1-1 shows an example of the HSS module within the INFI 90 hierarchy.

In most applications, the HSS module works with the frequency counter (FCS) module through a multi-function processor (MFP) module. The FCS module counts and times pulse inputs from a magnetic sensing device on the turbine shaft.

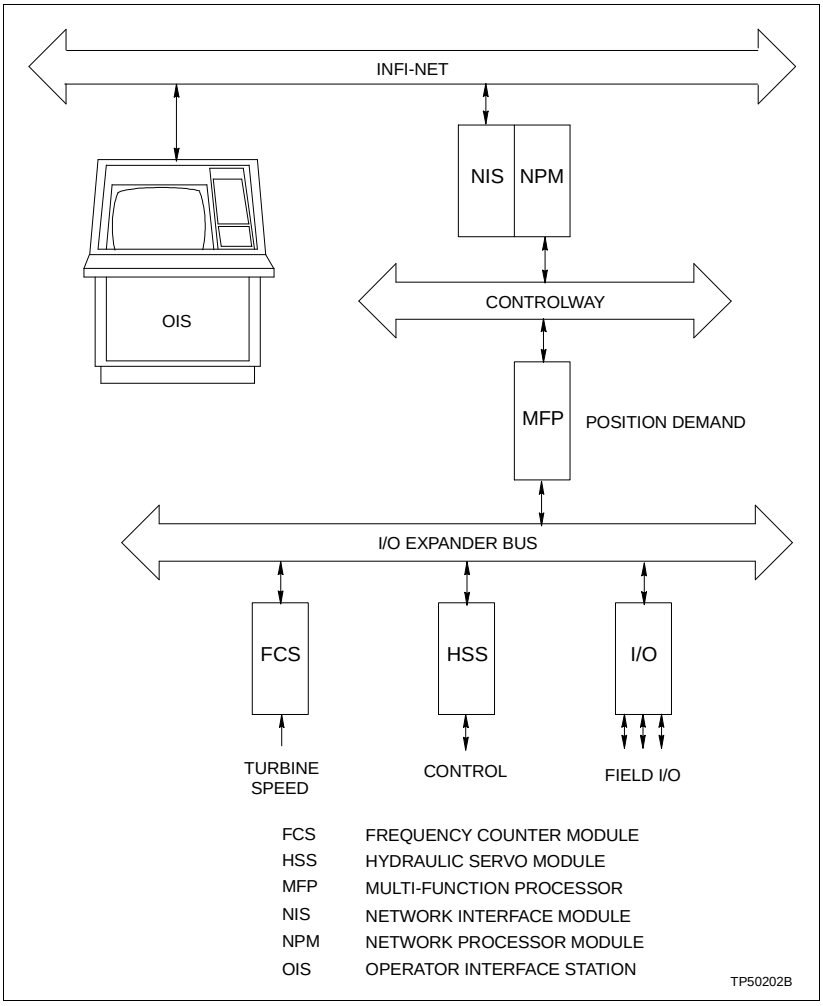

Figure 1-1. HSS Module within the INFI 90 Hierarchy

The MFP module uses the data from the FCS module to calculate turbine speed. The configuration within the MFP module uses the calculated speed to drive the servo valve outputs according to the control strategy.

FEATURES

Enhancements to the IMHSS03 module improve its performance over its predecessor, the IMHSS01 and IMHSS02 modules. Performance improvements include:

- High resolution analog-to-digital and digital-to-analog converters, more accurate LVDT signal condition, an I/H converter interface, and improved digital and analog input/output isolation.

- The IMHSS03 module can automatically tune its demodulator gain, offering better control loop response.
- The redundant LVDT interface can handle AC or DC LVDT transformers.
- Redundant servo valve outputs offer the choice of operating two active controlling servo valves simultaneously or one active controlling servo valve with one servo valve in standby.

INSTRUCTION CONTENT

This instruction contains nine sections and five appendices. Read this document before installing or operating the HSS module. A summary of section content follows.

Introduction Contains general information and technical specifications.

Description and Operation Uses block diagrams, schematics and text to explain module operation.

Installation Covers the preliminary steps to prepare the module for operation. It covers switch settings, configuration and field wiring.

Calibration Explains how to calibrate the module and LVDT transformer, and tune the control loop before placing it into operation.

Operating Procedures Provides information on daily use, start-up procedures and normal operation.

Troubleshooting Explains LED conditions, lists status messages and lists corrective action if problems occur.

Maintenance Contains scheduled maintenance tasks and procedures.

Repair/Replacement Procedures Contains procedures that explain how to replace the module, and termination unit and module. It also has a spare parts list with Bailey part numbers for related parts, cables, and fuses.

Support Services Explains the services and training that Bailey makes available to their customers.

Appendices Provide a quick reference of HSS module dipswitch settings, explain calibration procedures using function code 150, and termination unit/module dipshunt and jumper settings.

HOW TO USE THIS INSTRUCTION

Read this instruction before handling the HSS module. Refer to a specific section for information as needed.

1. Read Section 5 before installing the HSS module.

2. Do the steps in Section 3.

3. Do the steps in Section 4.

4. Refer to Section 6 to resolve problems if they occur.

5. Refer to Section 7 for scheduled maintenance requirements.

6. Refer to Section 8 to replace a part or find a part number.

7. Use Section 9 for information on ordering parts and warranty information.

8. Refer to the appendices for a quick reference of HSS module dipswitch and jumper settings, calibration and tuning using function code 150, and termination unit/module jumper and dipshunt settings, cable connections and terminal assignments.

REFERENCE DOCUMENTS

Table 1-1 lists documents that provide reference material that is useful to install, calibrate, tune and operate the IMHSS03 module.

Table 1-1. Reference Documents

Number	Title
I-E96-200	Function Code Application Manual
I-E96-201	Multi-Function Processor Module (IMMFP01)
I-E96-202	Multi-Function Processor Module (IMMFP02)
I-E96-203	Multi-Function Processor Module (IMMFP03)
I-E96-314	Frequency Counter Module (IMFCS01)
I-E96-410	Digital Input Termination Module (NIDI01)
I-E96-424	Digital Input Termination Unit (NTDI01)
I-E96-445	Hydraulic Servo Termination Unit (NTHS03)
TP89-2	Analog Control Techniques and Tuning

NOMENCLATURE

Table 1-2 lists nomenclatures associated with the IMHSS03 module.

Table 1-2. Nomenclature

Nomenclature	Description
IEMMU01 IEMMU02	Module mounting unit: Rear mount Front mount
IMFCS01	Frequency counter module
IMHSS03	Hydraulic servo module
IMMFP01/02/03	Multi-function processor modules
NIDI01	Digital I/O termination module
NKAS02	Termination cable, 2 NIDI01 modules to IMHSS03
NKHS03	Termination cable, NTHS03 to IMHSS03, or NTDI01 to IMHSS03 (using J2 only)
NTDI01	Digital I/O termination unit
NTHS03	Hydraulic servo termination unit

GLOSSARY OF TERMS AND ABBREVIATIONS

Table 1-3 contains a glossary of terms and abbreviations used in this instruction.

Table 1-3. Glossary of Terms and Abbreviations

Term	Definition
Controlway	High speed, redundant, peer-to-peer communication link. Used to transfer information between intelligent modules within a process control unit.
CTM	Configuration and tuning module. Provides a local means for system configuration, tuning and monitoring of control modules over module bus.
CTT	Configuration and tuning terminal. A handheld module with the same functionality as the configuration and tuning module.
Dipshunt	Dual in-line package with shorting straps.
Dipswitch	Dual in-line package that contains switches.
FCS	Frequency counter module.
FTP	Field termination panel. A panel inside the INFI 90 cabinet that provides a place to mount termination units.
Function Code	An algorithm which manipulates specific functions. These functions are linked together to form the control strategy.
Hydraulic Actuator	A cylinder that converts hydraulic power into mechanical work (opening or closing a valve).
Hydraulic Servo Valve	A valve, driven by a calibrated electrical signal, that loads or unloads hydraulic fluid to one side of a double acting hydraulic actuator.
I/H Converter	A device, driven by a calibrated unipolar current signal, that loads or unloads hydraulic fluid to one side of a double acting hydraulic actuator.

Table 1-3. Glossary of Terms and Abbreviations (continued)

Term	Definition
I/O Expander Bus	Parallel communication bus between the control and I/O modules.
LVDT	Linear variable differential transformer. A transformer that provides actuator position feedback by inducing a differential voltage proportional to the core position (hydraulic actuator position) when driven by an excitation voltage.
MFP	Multi-function processor module. A multiple loop controller with data acquisition and information processing capabilities.
MMU	Module mounting unit. A card cage that provides electrical and communication support for INFI 90/Network 90® modules.
Module Bus	Peer-to-peer communication link used to transfer information between intelligent modules within a process control unit.
OIS	Operator interface station. Integrated operator console with data acquisition and reporting capabilities. It provides a digital access into the process for flexible control and monitoring.
Termination Module	Provides input/output connection between plant equipment and the INFI 90/ Network 90 modules.
Termination Unit	Provides input/output connection between plant equipment and the INFI 90/ Network 90 modules.
TMU	Termination mounting unit. A card cage that provides housing for INFI 90/Network 90 termination modules.

SPECIFICATIONS

Table 1-4 lists IMHSS03 module specifications.

Table 1-4. Specifications

Property	Characteristic/Value
Power requirements	

Voltage (VDC)	Current (mA)		Power (W)	
	Nom	Max	Nom	Max
5	576	940	2.88	4.70
+15	15	27	0.23	0.41
-15	12	18	0.18	0.27
24	335	570	8.04	13.68

I/O requirements	
LVDT secondary 2-position inputs	4 analog inputs total, 2 LVDT secondary inputs (each with 2 secondaries) 24 Vpp, ±7 VDC common mode, 10 kΩ differential input impedance

® Network 90 is a registered trademark of Elsag Bailey Process Automation.

Table 1-4. Specifications (continued)

Property	Characteristic/Value
I/O requirements *(continued)*	
LVDT supply primary excitation outputs	2 analog outputs: LVDT primary 1 and 2 Operating frequency: 400 Hz to 15 kHz

LVDT Excitation Voltage (Vpp)	Min. LVDT Impedance (Ω)
2.1	15.0
2.6	18.0
3.6	24.0
4.5	30.0
5.4	36.0
6.0	40.0
7.7	51.3
9.0	60.0
13.5	90.0
18.0	120.0

Servo valve coil outputs	4 analog outputs total, 2 redundant analog outputs (selectable) with servo output protection. Shorting or opening 1 output does not affect the other output.

Output Current (mA)	Max. Coil Impedance (Ω)
±8	750
±16	375
±24	250
±32	187
±40	150
±48	125
±56	107
±64	93

I/H converter output	1 analog output

Output Current (mA)	Max. Impedance (Ω)
4 - 20	300
20 - 160	15

Position panel meter output	1 analog output (scaled feedback output)

Output Current (mA)	Max. Impedance (Ω)
4 - 20	300

Unscaled position feedback output	1 analog output

Output Current (mA)	Min. Impedance (Ω)
2	5000

Table 1-4. Specifications (continued)

Property	Characteristic/Value
I/O requirements *(continued)*	
Test mode output	1 analog output **Output Current (mA)**: 1 **Min. Impedance (Ω)**: 5000
Digital inputs	3 optically isolated (250 VDC) contact inputs (raise, lower and trip bias) **State**: On; **Voltage (VDC)**: 18 min.; **Current**: 2.8 mA nominal forward current[1] **State**: Off; **Voltage (VDC)**: 11 max. (turn-off voltage); **Current**: 10 µA max. leakage current **NOTE:** 1. When V_{in} = 24 VDC nominal.
Digital output	1 independent, optically isolated (250 VDC), open collector output (hard manual) **State**: On; **Voltage (VDC)**: 2.4; **Current**: 250 mA **State**: Off; **Voltage (VDC)**: 24; **Current**: 10 µA
Environmental	
Electromagnetic/radio frequency interference	Values not available at this time. Keep cabinet doors closed. Do not use communication equipment any closer than 2 meters from the cabinet.
Ambient temperature	0° to 70°C (32° to 158°F)
Atmospheric pressure	Sea level to 3 km (1.86 mi)
Humidity	5% to 90% relative humidity up to 55°C (131°F) noncondensing 5% to 40% relative humidity above 55°C (131°F) noncondensing
Air quality	Noncorrosive
Mounting	Occupies one slot in an INFI 90 module mounting unit
Surge protection	Meets IEEE-472-1974 surge withstand capability test
Certification	CSA certification pending for use as process control equipment in an ordinary (nonhazardous) location

SPECIFICATIONS SUBJECT TO CHANGE WITHOUT NOTICE.

SECTION 2 - DESCRIPTION AND OPERATION

INTRODUCTION

This section explains the operation of the IMHSS03 Hydraulic Servo Module. It gives an overview of the hydraulic servo (HSS) module and related modules within a process control system and explains the operation of key module circuitry.

CONTROL LOOP OPERATION

The HSS module, frequency counter (FCS) module and multi-function processor (MFP) module form the controlling segment of a closed loop control system. The MFP module directs the control process. The HSS and FCS modules interface the process to the MFP module. Figure 2-1 shows a diagram of the turbine speed control loop and the control signals to and from the process.

HSS Module

The HSS module provides control of throttle valve position in a turbine speed control system. The MFP module sends data to the HSS module, which directs the control of a hydraulic actuator (via a servo valve or I/H converter). By sending a position demand to the HSS module, the MFP module initiates a change in turbine speed. The position demand travels over the I/O expander bus to the HSS module. An on-board microprocessor reads the demand and loads it into a digital-to-analog (D/A) converter. The resulting analog value drives the servo valve.

The servo valve loads hydraulic fluid to one side of a double acting hydraulic actuator. As the hydraulic actuator opens or closes the throttle valve, the turbine speed changes. If the hydraulic actuator is being driven by an I/H converter, then the HSS module scales the signal sent by the MFP module to a four to 20 milliamp signal or 20 to 160 milliamp signal and the PID controller circuitry is bypassed. This four to 20 milliamp signal linearly drives the I/H converter to load hydraulic fluid to one side of the double acting actuator.

The MFP module requires function code 55 or 150 in its configuration to direct the operation of the IMHSS03 module. Function code 55 defines the module address, mode of operation (calibration or normal), calibration cycle time and stores calibration data. The ten output blocks include actuator position, digital-to-analog converter output, servo valve coil output current, and status outputs for the module and process equipment.

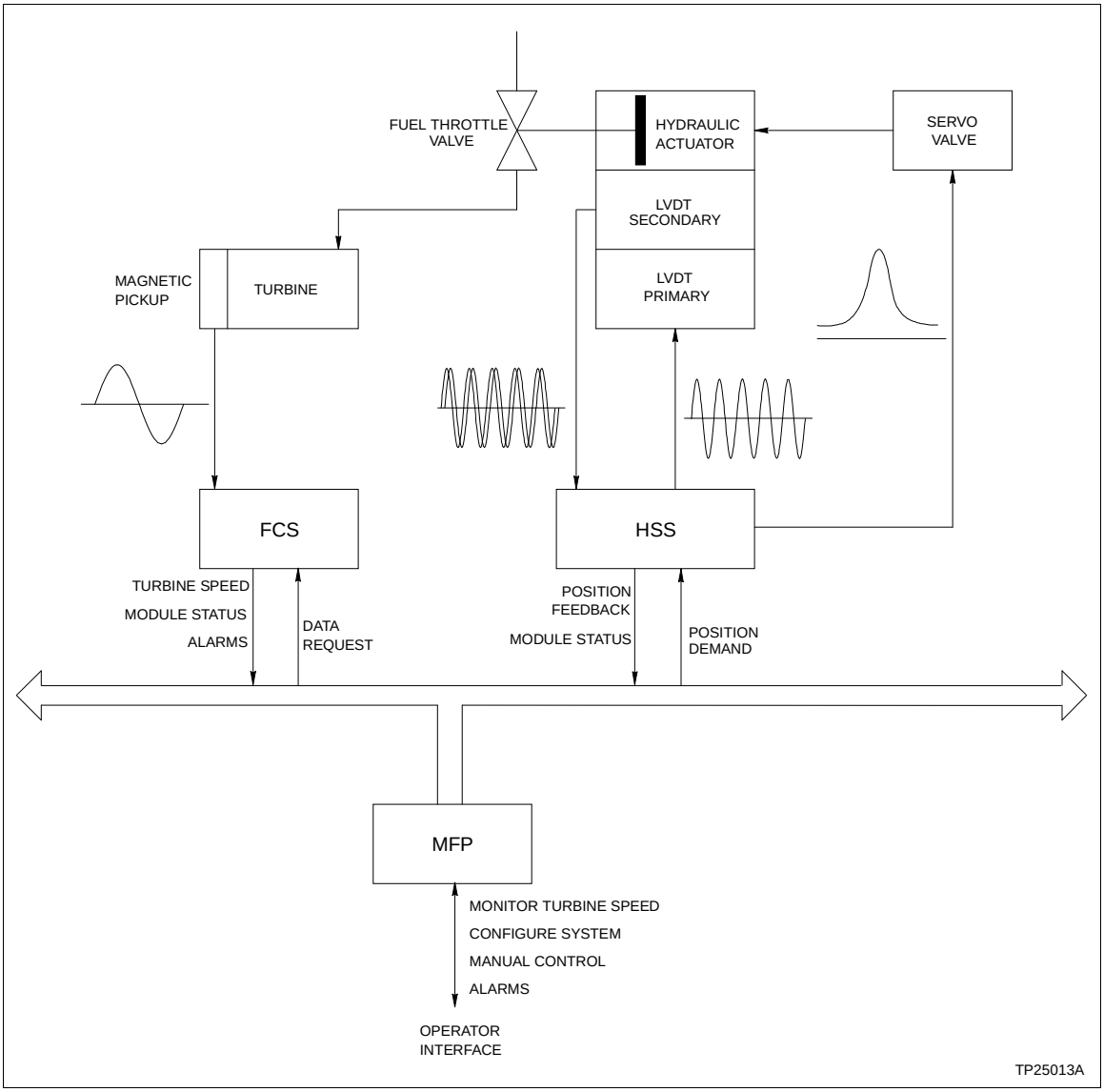

Figure 2-1. Turbine Speed Control Loop

A linear variable differential transformer (LVDT) measures actuator position. The HSS module supplies a 400 to 15,000 hertz excitation voltage (selected through function code 55) to the LVDT primary. A zero in the LVDT frequency specification of function code 55 enables an excitation voltage for a DC LVDT. A dipswitch on the HSS module selects the excitation voltage amplitude ranging from 1.08 volts peak to 9.0 volts peak.

The LVDT secondary develops a differential voltage proportional to the position of the hydraulic actuator. The HSS module converts the differential voltage to digital data and sends it to the MFP module. Using the data the MFP module stores (during valve calibration) in its configuration specifications (S18 through S21), it translates the LVDT secondary

differential voltage into actuator position feedback. The HSS module is self-checking and notifies the MFP module if a failure occurs.

The HSS module initiates manual control of the turbine throttle valve if an HSS module communication failure with the MFP module occurs (or the MFP module goes into configuration mode). The HSS module provides inputs that the user hard wires to a 24 VDC source. The user directs the HSS module to raise or lower the actuator through external inputs (pushbuttons, contacts, etc.). Also, a trip bias circuit on the HSS module drives the fuel throttle valve to the closed position if necessary.

FCS Module

The FCS module detects turbine speed by counting pulses it receives from a magnetic pickup on the turbine shaft. Additionally, it keeps a 24-bit timer value corresponding to the period of the pulse count. It stores these values in a buffer and sets a data available status bit to notify the MFP module that it has current data. FCS module operation is automatic; it continuously updates the count and holds it for the MFP module.

For the MFP module to work with the FCS module, it requires function code 145 in its configuration. Function code 145 defines the module address, high/low speed alarms and high/low rate of change alarms. The block output is frequency of input pulses in hertz. The frequency counter continuously checks itself and notifies the MFP module if a failure occurs.

MFP Module

The MFP module is the controlling module of the control loop and controls turbine speed according to the control strategy of the user. The MFP module requests data from the FCS module to calculate turbine speed. If the FCS module has data available, it sends it to the MFP module. If there is no data available the MFP module must make another request. If the turbine speed goes above or below the speed set point in the MFP module configuration, the MFP module will send a position demand to the HSS module to adjust the throttle valve. This process repeats continuously at the cycle time of the MFP module.

The user sets the turbine speed limits and high/low speed alarms during configuration of the MFP module and I/O modules. Additionally, the user calibrates the hydraulic actuator and LVDT transformer. The user also initiates auto tuning of the demodulator gain. Proportional gain is tuned manually (demodulator gain can also be tuned manually). The MFP module sends data, module status and alarms to the operator interface during normal operation. The operator can monitor system operation and initiate automatic or manual control through the operator interface.

HSS MODULE OPERATION

The HSS module interfaces the MFP module to a servo valve or I/H converter, providing the MFP module with position control of a fuel throttle valve or steam governor valve. The HSS module microprocessor carries the workload. It is able to perform multiple tasks with the help of the module support circuitry. The microprocessor provides the intelligence (firmware) needed to relay position demands from the MFP module, read position feedback information, set targets for the output, and present module status information to the MFP module, direct manual control and perform self-check diagnostics. There are seven functional blocks (see Figure 2-2):

- I/O expander bus interface.
- Status and data buffers.
- Microprocessor.
- Position demand and output.
- Position feedback input.
- LVDT oscillator.

Digital I/OAll the blocks of the support circuitry help the microprocessor direct module activity and interface the control loop. Power enters the board by way of the module mounting unit backplane. The I/O expander bus interface provides I/O module communication with the multi-function processor module. The position demand circuitry performs digital-to-analog conversion of position demands, while the output circuitry amplifies the current driving the servo valve coils. A dither oscillator prevents fuel valves from freezing in one position. The position feedback block demodulates feedback from the LVDT secondary and converts it from an analog signal to digital data. A frequency selectable (400 hertz to 15 kilohertz) oscillator supplies the excitation voltage for the LVDT primary. The digital I/O circuitry provides isolated DC inputs to manually control the turbine throttle valve. If there is a communication failure between the MFP and HSS modules, this circuitry enables the operator to control turbine speed. The digital I/O circuitry provides a means to manually control the hydraulic actuator position by sending a raise or lower signal to servo valve or I/H converter.

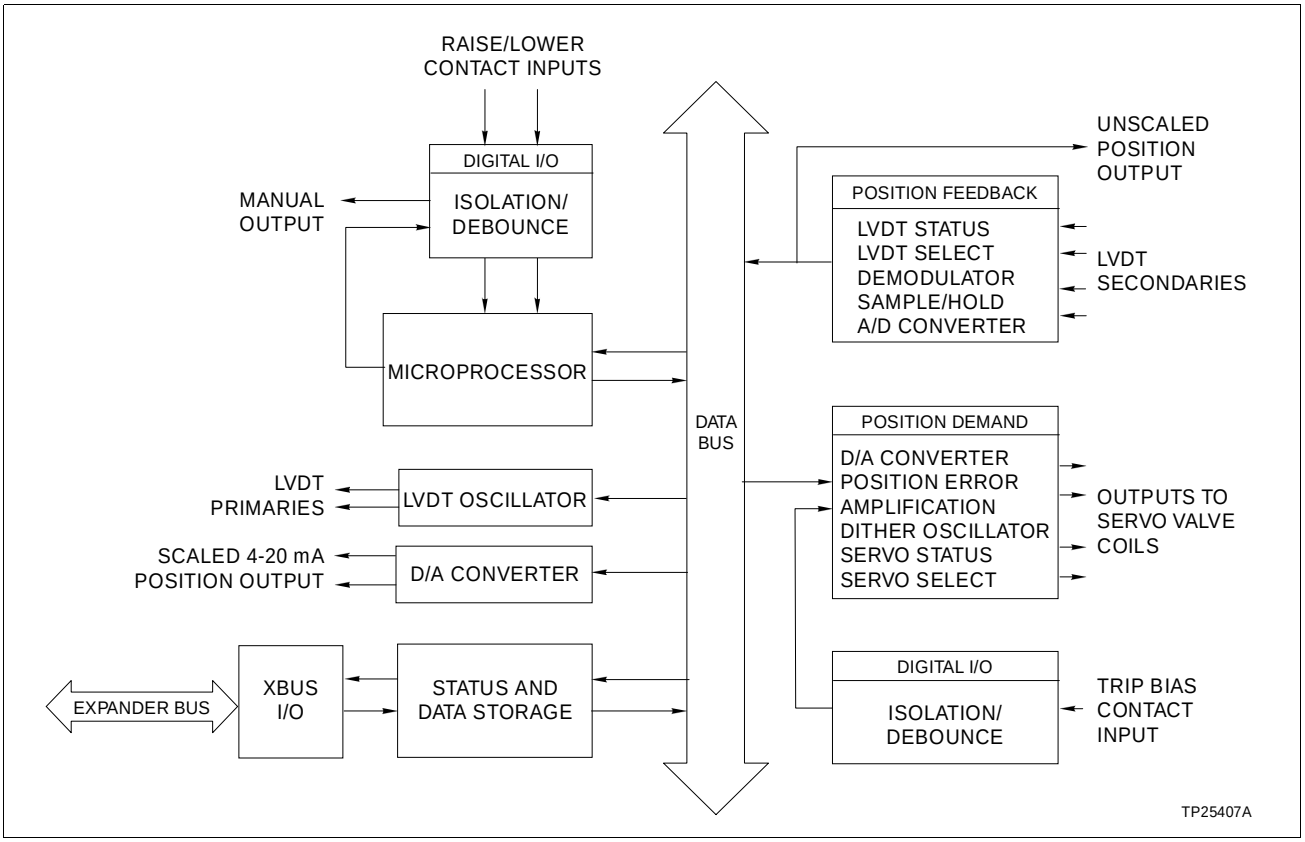

Figure 2-2. Functional Block Diagram

HSS MODULE CIRCUITRY

The following text explains the operation of the seven functional blocks that make up the HSS module.

I/O Expander Bus Interface

The I/O expander bus interface enables communication between the processor module and the HSS module. This communication channel is an eight-bit parallel data bus with two control lines. A Bailey designed integrated circuit performs the communications protocol for interfacing the data and status information to the processor module. It performs address compare, read/write strobe generation and contains bus drivers and receivers.

The I/O expander bus address is selected by setting a dipswitch on the HSS module. The address byte precedes every data transfer. The I/O expander bus integrated circuit does an address comparison before allowing data to transfer on the I/O expander bus. If the addresses match, the MFP module can strobe data to or from the I/O expander bus.

The MFP module sends the following information and commands to the HSS module by way of the I/O expander bus interface:

- Position demand.
- LVDT frequency.
- Controller deadband.
- Valve action on LVDT error.
- Block output display units.
- Calibration differential voltage values.
- Demodulator and proportional gain values.
- Hard manual mode enable.
- Calibrate/operate mode select.
- Calibrate go/hold status.
- Calibration stroke time.
- Number of calibration cycles.
- Null check request.

The HSS module sends the following information and status to the MFP module by way of the I/O expander bus interface:

- D/A demand value.
- Servo or I/H output percent.
- At null indicator.
- Calculated demodulator and proportional gain inputs.
- Actuator position.
- Actuator at LVDT null.
- New calibration data.
- Module mode equals normal/hard manual.
- Calibration status.
- Good/bad status for:

  Positioning.
  Analog-to-digital (A/D) and D/A converter.
  LVDT primaries.
  LVDT secondaries.
  Output one.
  Output two.

- Microprocessor/hardware.
- Communications.
- Contingency.

Status and Data Buffers

The status and data buffers hold status information and process data traveling between the microprocessor and the I/O expander bus. This allows the two asynchronous busses to operate together and exchange information using handshake signals.

Microprocessor

The HSS module uses a 16-bit microprocessor to control board functions and communicate with the MFP module through the I/O expander bus interface. The microprocessor controls the analog-to-digital processing, passes position feedback and status information to the MFP module, reads control data from the MFP module, writes position demands to the D/A converter and does self checks.

The microprocessor also controls the hard manual circuit. This circuit provides isolated contacts the user connects to 24 VDC, giving the operator a way to initiate control of the hydraulic actuator in the event the MFP module communications is lost. By activating the raise or lower contacts, the operator tells the microprocessor to change the actuator position. The microprocessor also writes to a digital output to tell the operator the module is in the hard manual mode of operation.

Position Demand and Output

There are four parts to the position demand and output block:

- D/A converter.
- Position error.
- Servo amplifier.
- Dither oscillator.

The output circuit provides proportional plus integral plus derivative (PID) closed loop control on the entire servo valve system. Additionally, the microprocessor reads servo status and selects which servo to output to through this output block. Figure 2-3 shows a simplified diagram of the position demand and output circuit.

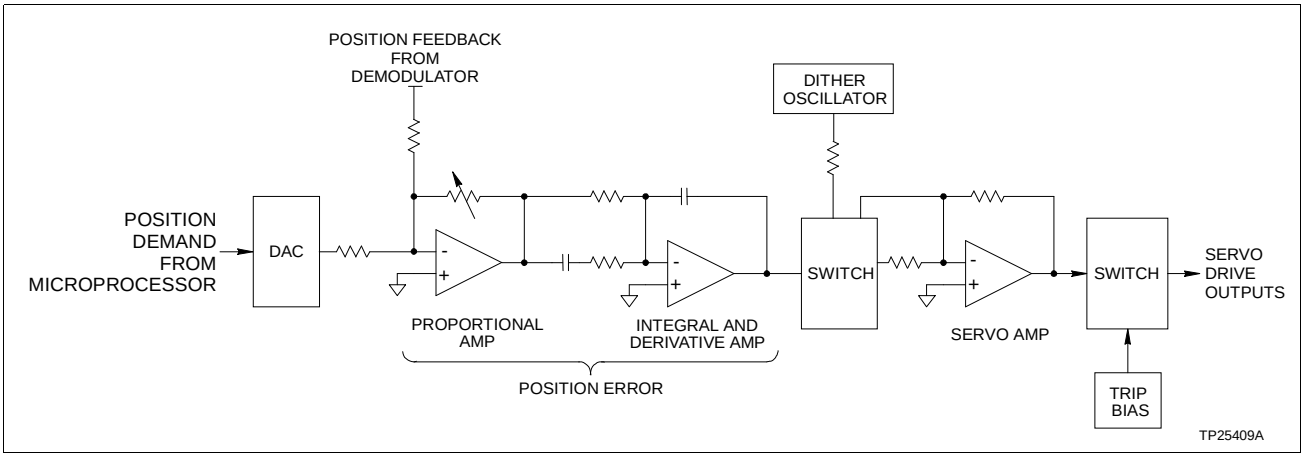

Figure 2-3. Position Demand and Output Circuit

DIGITAL-TO-ANALOG CONVERTER

The D/A converter receives the position demand from the microprocessor. It converts the data from a digital word to an equivalent analog signal. The D/A converter outputs the analog position demand to the position error circuit.

POSITION ERROR

The position error circuit compares position demand with position feedback. The output of this circuit is the difference between the position feedback and the position demand signal. This signal goes to the servo amplifier. The position error output is zero when position demand and position feedback are equal. When the amplifier output is zero, indicating that the actuator is in the correct position, the servo amplifier holds the servo valve in place and the actuator holds its position.

SERVO AMPLIFIER

The servo amplifier provides the power to drive the servo valve. There are two servo drive outputs in parallel providing redundancy in the control output. Each output connects to separate coils. Servo valve operation requires only one functioning coil. One output can short to ground or open without affecting the other servo drive output. If one servo drive output fails, the other output is able to drive the servo valve.

DITHER OSCILLATOR

The dither oscillator introduces an oscillation of small magnitude to the servo valve to help it overcome the effect of friction. In systems where valve position rarely changes, the dither oscillator prevents the valve from freezing in one position.

Position Feedback

There are three parts to the position feedback block (see Figure 2-4):

- Demodulator.
- A/D converter.
- LVDT oscillator.

DEMODULATOR

The LVDT secondaries respond to the movement of the hydraulic actuator by generating a differential voltage that is proportional to the position of a transformer core that moves as the actuator moves. Since the LVDT secondary is linear, the induced voltage on the transformer secondary is calibrated with the full range of the throttle valve. There is a maximum

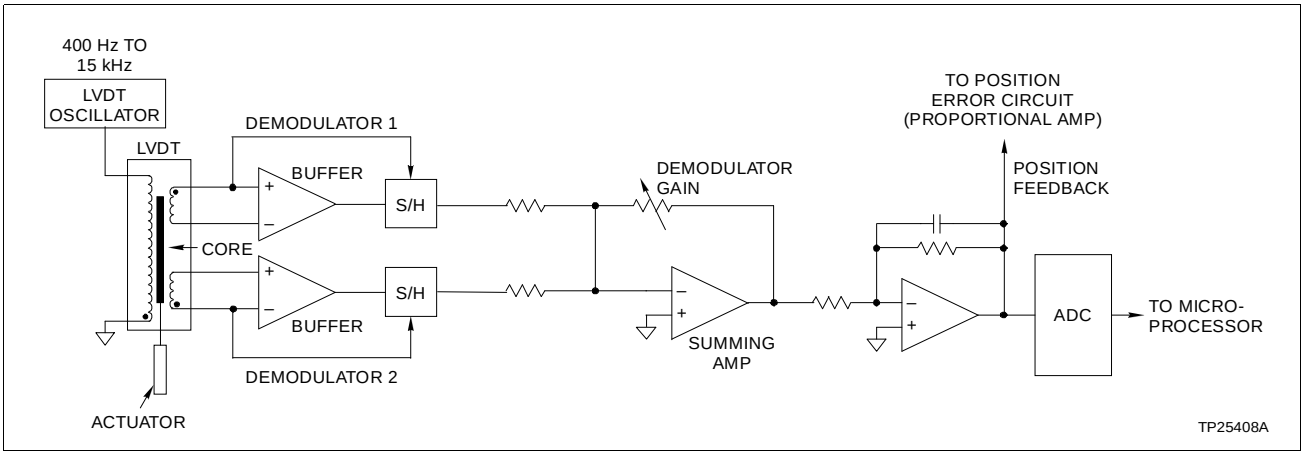

Figure 2-4. Position Feedback Circuit

and minimum differential voltage indicating a fully open or fully closed valve. A valve half (50 percent) open is at the null position (differential voltage is zero). The demodulator sums the LVDT secondary inputs (which are out of phase) and the result is a DC offset that represents the actuator position. The position feedback signal passes from the demodulator output to the sample hold circuit.

The sample hold circuit samples the demodulator output 1,000 times per second. The position feedback travels directly from the sample hold output to the position error circuit, completing the control portion of the feedback loop.

ANALOG-TO-DIGITAL CONVERTER

This portion of the position feedback circuitry converts the analog feedback signal to a digital value. The position feedback passes from the A/D converter to the data buffers, to the microprocessor, to the I/O expander bus and finally to the MFP module.

LVDT OSCILLATOR

The LVDT oscillator (frequency selectable) supplies an excitation voltage to the LVDT primary. This excitation voltage induces a differential voltage on the LVDT secondary that indicates actuator position. This output has selectable gains. Setting a dipswitch adjusts the operating range of the LVDT excitation voltage to allow a maximum range of output voltage on the LVDT secondaries.

Digital I/O

If the HSS module loses communication with the MFP module, the manual control circuitry enables the operator to manually change actuator position. The HSS module provides two 24 VDC isolated digital inputs as raise/lower commands from a manual station (pushbuttons, contacts, etc.). These inputs connect to the microprocessor. The microprocessor increments or decrements a position demand to the servo valve when the operator activates the contacts. Figure 2-5 shows a schematic of a typical isolated digital input circuit.

Trip bias is the third digital input. The trip bias input signal is sent to the position error circuit (see Figure 2-3). Activating the trip bias input drives the actuator to the zero percent position (fully closed) for shutdown. Hard manual is an isolated output that provides a connection for an external indicator (LED) or alarm. The indicator notifies the operator that the module is in the hard manual mode.

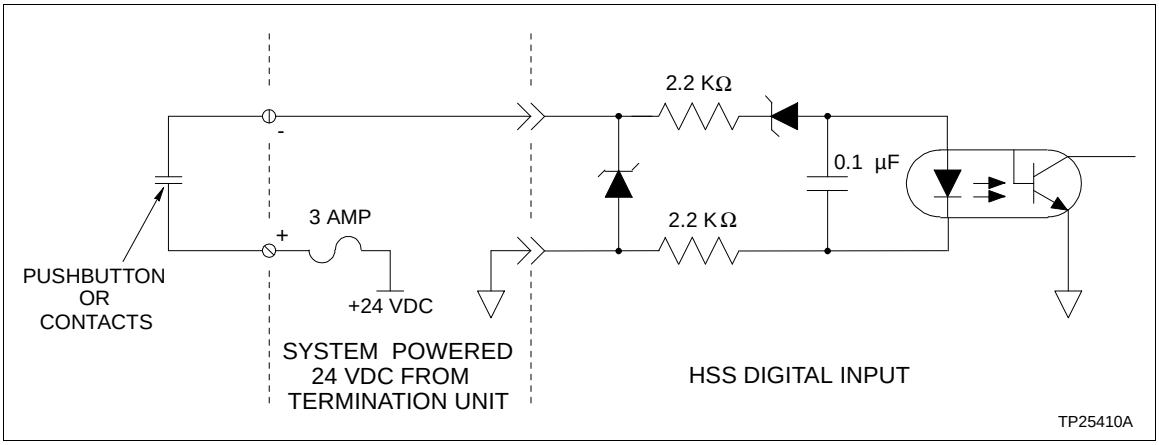

Figure 2-5. Typical Digital Input Circuit

SECTION 3 - INSTALLATION

INTRODUCTION

This section covers the proper handling of electrostatic sensitive devices, termination unit or module installation, preliminary dipswitch settings, jumper settings, hydraulic servo (HSS) module installation and configuration. The steps in this section prepare the module for LVDT/actuator calibration and tuning.

SPECIAL HANDLING

The HSS module uses devices susceptible to electrostatic discharge. Follow these handling procedures:

> **NOTE:** Always use Bailey's field static kit (part number 1948385_1 - consisting of two wrist straps, ground cord assembly, alligator clip, and static dissipative work surface) when working with the modules. The kit grounds a technician and the static dissipative work surface to the same ground point to prevent damage to the modules by electrostatic discharge.

1. ***Use Static Shielding Bag.*** Keep the modules in the static shielding bag until you are ready to install them in the system. Save the bag for future use.

2. ***Ground Bag Before Opening.*** Before opening a bag containing an assembly with semiconductors, touch it to the equipment housing or a ground to equalize charges.

3. ***Avoid Touching Circuitry.*** Handle assemblies by the edges; avoid touching the circuitry.

4. ***Avoid Partial Connection of Semiconductors.*** Verify that all devices connected to the modules are properly grounded before using them.

5. ***Ground Test Equipment.***

6. ***Use an Antistatic Field Service Vacuum.*** Remove dust from the module if necessary.

7. ***Use a Grounded Wrist Strap.*** Connect the wrist strap to the appropriate grounding plug on the power entry panel. The grounding plug on the power entry panel must be effectively connected to the earth grounding electrode system through the AC safety ground.

8. ***Do Not Use Lead Pencils to Set Dipswitches.*** To avoid contamination of dipswitch contacts that can result in

unnecessary circuit board malfunction, do not use a lead pencil to set a dipswitch.

UNPACKING AND INSPECTION

1. Examine the hardware immediately to verify that it has not been damaged in transit.

2. Notify the nearest Bailey sales office of any such damage.

3. File a claim for any damage with the transportation company that handled the shipment.

4. Use the original packing material and container to store the hardware.

5. Store the hardware in an environment of good air quality, free from temperature and moisture extremes.

INSTALLING THE PROCESS HARDWARE

WARNING	**Only qualified personnel should install the throttle valve, hydraulic actuator, servo valve and linear variable differential transformer. Improper installation can cause damage to plant equipment, reduce plant performance and compromise the safety of plant personnel.**
AVERTISSEMENT	**Seulement un personnel qualifié devrait effectuer l'installation de la vanne de réglage, de l'actuateur hydraulique, de la servo-vanne, et du transformateur à différentiel linéaire variable. Une mauvaise installation peut causer des dommages à l'équipement, peut réduire la performance de l'usine et peut compromettre la sécurité du personnel.**

To install the throttle valve, hydraulic actuator, servo valve (or I/H converter) and LVDT transformer:

1. Follow the manufacturer's directions and recommendations for installation.

2. Use the size and type of cabling the manufacturer recommends.

INSTALLING THE TERMINATION UNIT OR MODULE

For information about installing process wiring and the hydraulic servo termination unit (THS), digital I/O termination unit (TDI), or digital I/O termination module (IDI), refer to the appropriate termination device instruction. Appendices C through E contain quick reference information for each of the termination devices.

NTHS03 Termination Unit Installation

Use the NTHS03 termination unit to operate the HSS module with full IMHSS03 functionality. This termination unit can also terminate an IMHSS03 module configured for IMHSS02 functionality. To install the NTHS03 termination unit:

1. Refer to the THS termination unit product instruction or Appendix C to select the required dipshunt and jumper settings.

2. Follow the steps in the THS product instruction to mount the termination unit to the field termination panel.

3. Connect the wiring from the servo valve or I/H converter, linear variable differential transformer, and digital I/O to the termination unit.

4. Follow the steps in the THS product instruction to connect the NKHS03 cable to the module mounting unit (MMU) slot for the HSS module and to the termination unit.

5. Follow the procedures in the termination unit product instruction to connect I/O common and 24 VDC on the system power bus bar to the termination unit.

NIDI01 Termination Module Installation

Two NIDI01 termination modules are required to terminate an HSS module with IMHSS03 functionality. To terminate an HSS module with IMHSS02 functionality, only one termination module is required. To install the NIDI01 termination module:

1. Refer to the IDI termination module product instruction or Appendix D to select the required jumper settings.

2. Follow the steps in the IDI product instruction to mount the termination module to the field termination panel.

3. Connect wiring from the servo valve or I/H converter, linear variable differential transformer, digital I/O, 24 VDC and I/O common to the termination module.

4. Follow the steps in the IDI product instruction to connect the NKAS02 cable to the MMU slot for the HSS module and to the termination module.

NTDI01 Termination Unit Installation

The NTDI01 termination unit can terminate only an HSS module having IMHSS02 functionality. To install the NTDI01 termination unit:

1. Refer to the TDI termination unit product instruction or Appendix E to select the required dipshunt settings.

2. Follow the steps in the TDI product instruction to mount the termination unit to the field termination panel.

3. Connect the wiring from the servo valve, linear variable differential transformer, digital I/O, 24 VDC and I/O common to the termination unit.

4. Follow the steps in the TDI product instruction to connect J1 of the NKHS03 cable to the MMU slot for the HSS module. Connect J2 to P1 on the termination unit. Tie wrap the J3 leg of the NKHS03 cable so that it is secured out of the way.

INITIAL IMHSS03 DIPSWITCH SETTINGS

CAUTION	**Only qualified personnel should configure these dipswitches. Damage or misoperation could occur if dipswitches are improperly configured.**
ATTENTION	**Seulement un personnel qualifié devrait configurer ces micro-interupteurs. Un mauvais fonctionnement ou des dommages pourraient se produire suite à une mauvaise configuration des micro-interupteurs.**

The IMHSS03 module has five dipswitches and 31 jumpers that must be configured. Dipswitch settings are application dependent. The information in this section covers the switch settings needed for initial installation. Complete the steps in this part of the installation procedure to prepare the module for automatic calibration and tuning.

Dipswitch S1 - I/O Expander Bus Address

Dipswitch S1 is an eight-pole dipswitch. Poles three through eight of this dipswitch set the I/O expander bus address. Pole one invokes module diagnostics. Refer to Section 6 for diagnostic dipswitch settings.

Set the HSS module I/O expander bus address to any unused binary address from zero to 63. Dipswitch poles one and two must be in the closed position for normal operation. Use poles three through eight to set the address. Table 3-1 lists examples of I/O expander bus address dipswitch settings. See Figure 3-1

for the location of S1 on the HSS module. Record the I/O expander bus address in the user setting column.

Table 3-1. Dipswitch S1, I/O Expander Bus Address Example Settings

Example Address	Dipswitch Pole (Binary Value)								User Setting
	1 (128)	2 (64)	3 (32)	4 (16)	5 (8)	6 (4)	7 (2)	8 (1)	
15	0	0	0	0	1	1	1	1	
32	0	0	1	0	0	0	0	0	
63	0	0	1	1	1	1	1	1	

NOTE: 0 = CLOSED or ON, 1 = OPEN or OFF.

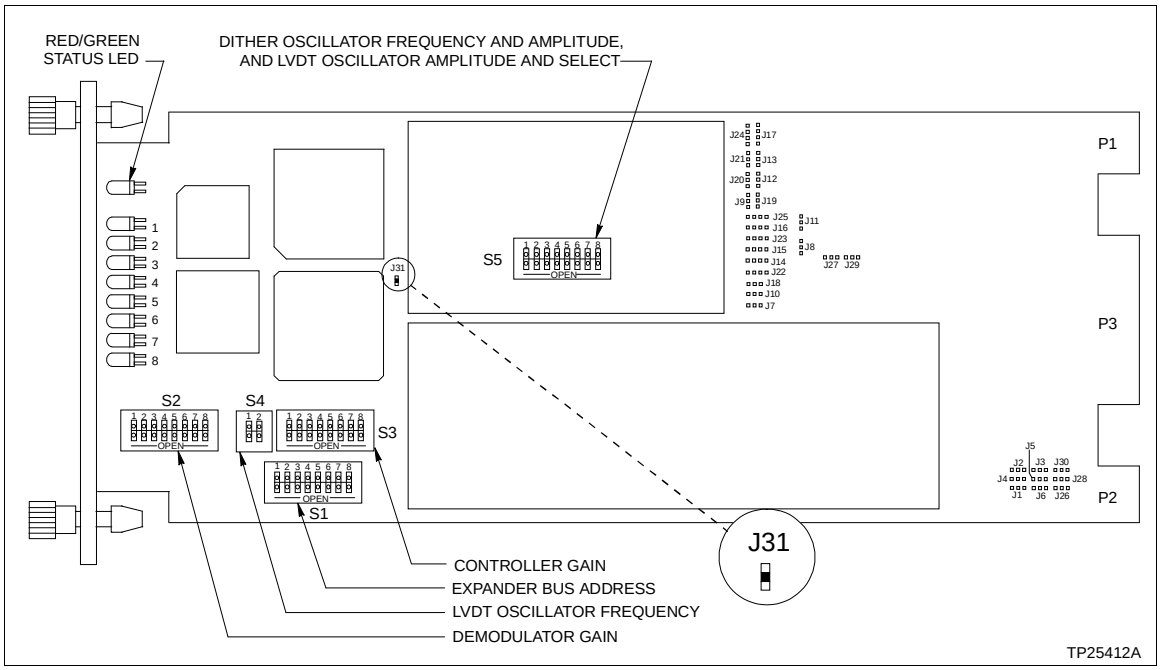

Figure 3-1. IMHSS03 Circuit Board Layout

Dipswitch S2 - Demodulator Gain

Dipswitch S2 is an eight-pole dipswitch that sets the demodulator gain. This dipswitch is ignored if the module is configured with function code 55. Set the demodulator gain to a value of two.

The demodulator gain amplifies the feedback signal so that the peak-to-peak span of the LVDT feedback signal is as close as possible to the full range of the 16-bit resolution analog-to-digital (A/D) converter. If the module is configured to operate as an IMHSS02 module using function code 150, this dipswitch must have an initial setting for manual LVDT calibration. Refer

to Appendix B to set S2 for manual LVDT calibration. Refer to Table 3-2 for S2 dipswitch settings.

Table 3-2. Dipswitch S2, Demodulator Gain

Gain	Dipswitch Pole								User Setting
	1	2	3	4	5	6	7	8	
2.0	1	1	1	1	1	1	1	0	
5.5	1	1	1	1	1	1	0	1	
10.0	1	1	1	1	1	0	1	1	
21.1	1	1	1	1	0	1	1	1	
48.8	1	1	1	0	1	1	1	1	
72.0	1	1	0	1	1	1	1	1	
100.9	1	0	1	1	1	1	1	1	
152.0	0	1	1	1	1	1	1	1	

NOTE: 0 = CLOSED or ON, 1 = OPEN or OFF.

Dipswitch S3 - Controller Gain

Dipswitch S3 is an eight-pole dipswitch that sets the controller gain. This dipswitch is ignored if the module is configured with function code 55. Set the controller gain to one.

This amplifier compares position demand to position feedback and outputs the difference of those signals. The controller gain affects the response of the control loop. If the module is configured as an IMHSS02 module using function code 150, this dipswitch must have an initial setting. Refer to ***CONTROLLER TUNING*** in Appendix B to initially set S2 for manual controller gain tuning. Refer to Table 3-3 for S3 dipswitch settings.

Table 3-3. Dipswitch S3, Controller Gain

Gain	Dipswitch Pole								User Setting
	1	2	3	4	5	6	7	8	
1.00	1	1	1	1	1	1	1	0	
2.00	1	1	1	1	1	1	0	1	
5.00	1	1	1	1	1	0	1	1	
10.50	1	1	1	1	0	1	1	1	
13.35	1	1	1	0	1	1	1	1	
14.46	1	1	0	1	1	1	1	1	
18.10	1	0	1	1	1	1	1	1	
20.52	0	1	1	1	1	1	1	1	

NOTE: 0 = CLOSED or ON, 1 = OPEN or OFF.

Dipswitch S4 - LVDT Oscillator Frequency

Dipswitch S4 is a two-pole dipswitch that sets the LVDT oscillator frequency. This dipswitch is ignored if the module is configured as an IMHSS03 module using function code 55. Set all poles to one (open).

If the module is configured as an IMHSS02 module using function code 150, set the LVDT oscillator frequency to the frequency specified by the manufacturer. To set the LVDT oscillator frequency:

1. Refer to the LVDT specifications for the recommended LVDT primary excitation voltage frequency.

2. Refer to Table 3-4 for dipswitch settings and set S4 so that the LVDT oscillator meets the manufacturer's specifications.

Table 3-4. Dipswitch S4, LVDT Oscillator Frequency

Frequency (kHz)	Dipswitch Pole 1	Dipswitch Pole 2	User Setting
1.0	1	1	
2.5	1	0	
5.0	0	0	
10.0	0	1	

NOTE: 0 = CLOSED or ON, 1 = OPEN or OFF.

Dipswitch S5 - Dither and LVDT Oscillator

Dipswitch S5 is an eight-pole dipswitch that sets the dither oscillator frequency and amplitude, and the LVDT oscillator amplitude (LVDT primary excitation voltage).

Set the dither oscillator amplitude and frequency to the value the manufacturer of the servo valve recommends. Dipswitch poles one and two set the dither oscillator frequency. Poles three and four set the dither oscillator amplitude or disables the dither oscillator circuitry. Poles five through eight set the LVDT oscillator amplitude. Set the LVDT oscillator amplitude to the value that the LVDT manufacturer recommends. To set dipswitch S5:

1. Refer to the servo valve specifications for the recommended dither oscillator current amplitude and frequency.

2. Refer to Table 3-5 for dipswitch settings and set poles 1 through 4 accordingly.

3. Refer to the LVDT specifications for the recommended LVDT oscillator amplitude.

4. Refer to Table 3-5 for dipswitch settings and set poles 5 through 8 accordingly.

Table 3-5. Dipswitch S5, Dither Oscillator Frequency/Amplitude and LVDT Oscillator Amplitude

Setting	Dipswitch Pole								User Setting
	1	2	3	4	5	6	7	8	
Dither oscillator frequency = 300 Hz	0	1							
Dither oscillator frequency = 200 Hz	1	0							
Dither amplitude = 5% of current output			0	1					
Dither amplitude = 10% of current output			1	0					
Dither disabled			1	1					
LVDT oscillator amplitude = 2.1 Vpp					0	0	0	0	
LVDT oscillator amplitude = 2.6 Vpp					0	0	1	0	
LVDT oscillator amplitude = 3.6 Vpp					0	1	1	0	
LVDT oscillator amplitude = 4.5 Vpp					0	1	1	1	
LVDT oscillator amplitude = 5.4 Vpp					1	0	0	1	
LVDT oscillator amplitude = 6.0 Vpp					1	0	1	0	
LVDT oscillator amplitude = 7.7 Vpp					1	1	0	0	
LVDT oscillator amplitude = 9.0 Vpp					1	0	1	1	
LVDT oscillator amplitude = 13.5 Vpp					1	1	0	1	
LVDT oscillator amplitude = 18.0 Vpp					1	1	1	0	

NOTE: 0 = CLOSED or ON, 1 = OPEN or OFF.

JUMPER SETTINGS

There are 31 jumpers on the HSS module. These jumpers select options such as servo valve or I/H converter mode, four to 20 milliamp positioning for contingency errors in I/H converter mode, servo valve output current, and AC or DC LVDT transformers. Table 3-6 lists the HSS module jumper settings. Figure 3-2 shows details of the jumpers. Figure 3-1 shows the location of J31 on the HSS circuit board. Set the jumpers to meet the requirements of your particular system.

Table 3-6. Jumpers J1 through J31

Function	Jumper Position	Jumper
Normal LVDT configuration	1-2	J1-J5
4 - 40 mA input (I/H converter contingency error, LVDT 2_1)	2-3	
Servo valve mode	1-2	J6, J7, J26
I/H converter mode	2-3	

Table 3-6. Jumpers J1 through J31 (continued)

Function	Jumper Position	Jumper
20 - 160 mA I/H converter	1-2	J8
	2-3	J9-J13, J18-J21
	3-4	J14-J17, J22-J25
4 - 20 mA I/H converter	1-2	J9
	2-3	J8, J10-J13, J18-J21
	3-4	J14-J17, J22-J25
±8 mA servo outputs	1-2	J10, J18
	2-3	J8, J9, J11-J14, J19-J22
	3-4	J15-J17, J23-J25
±16 mA servo outputs	1-2	J10, J11, J18, J19
	2-3	J8, J9, J12-J15, J20-J23
	3-4	J16, J17, J24, J25
±24 mA servo outputs	1-2	J10-J12, J18-20
	2-3	J8, J9, J13-J16, J21-J24
	3-4	J17, J25
±32 mA servo outputs	1-2	J10-J13, J18-J21
	2-3	J8, J9, J14-J17, J22-J25
±40 mA servo outputs (servo1/C1 and servo2/C1 outputs only)	1-2	J10-J14, J18-J22
	2-3	J8, J9
	3-4	J15-J17, J23-J25
±48 mA servo outputs (servo1/C1 and servo2/C1 outputs only)	1-2	J10-J15, J18-J23
	2-3	J8, J9
	3-4	J16, J17, J24, J25
±56 mA servo outputs (servo1/C1 and servo2/C1 outputs only)	1-2	J10-J16, J18-J24
	2-3	J8, J9
	3-4	J17, J25
±64 mA servo outputs (servo1/C1 and servo2/C1 outputs only)	1-2	J10-J25
	2-3	J8, J9
AC LVDT (sine wave output to primary)	1-2	J27-J30
DC LVDT (15 VDC output for LVDT power)	2-3	
Normal operation	1-2	J31
Microcontroller clock disabled (internal test only)	open	

NOTE: To enable a function, place jumper straps over (short) the required jumper positions.

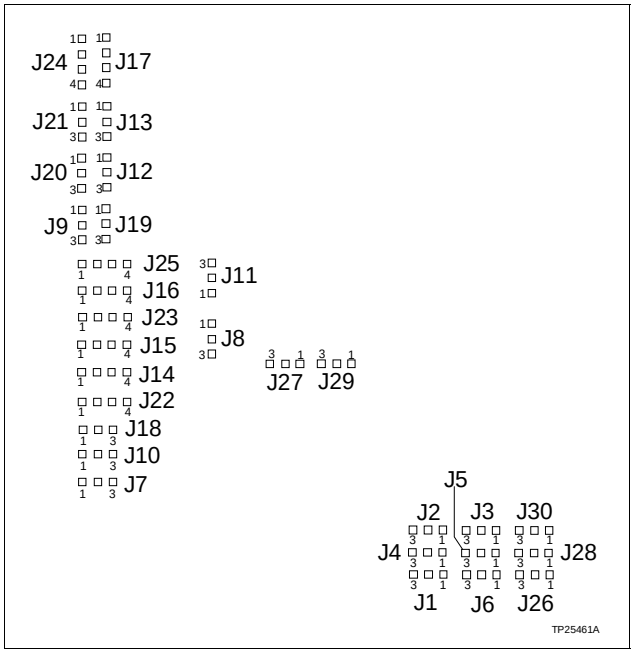

Figure 3-2. IMHSS03 Jumper Layout

IMHSS03 MODULE INSTALLATION

WARNING	**Disconnect power before installing dipshunts on the module mounting unit backplane. Failure to do so will result in contact with cabinet areas that could cause severe or fatal shock.**
AVERTISSEMENT	**Interrompez l'alimentation avate d'installer des dipshunts sur le fond de panier du châssis de montage des modules. Sinon, tout contact avec cette zone entraîne des risques d'électrocution sérieuse ou fatale.**

To install the HSS module in the module mounting unit:

1. Locate the module mounting unit slot assignment for the module.

2. Check the I/O expander bus dipshunt socket on the backplane of the module mounting unit. The dipshunt must be installed with all pins shorted. There must be a communication path from the MFP module to the I/O module.

3. Align the top and bottom edges of the circuit card with the top and bottom rails of the assigned slot in the module mounting unit.

4. Slide the module into the slot. Push until the module is seated in the backplane connector. Turn the 2 thumbscrews on the faceplate ½-turn until the module locks in place.

FUNCTION CODE 55 CONFIGURATION

If the jumpers and dipswitches in this section are set up for operation with function code 55:

1. Configure the multi-function processor with function code 55. Refer to the ***Function Code Application Manual*** for information on how to configure function code 55.

2. Tune the demodulator gain, calibrate the LVDT transformer, and tune the PID controller gain. Refer to Section 4 for procedures explaining how to do either automatic (demodulator gain only) or manual calibration and tuning using function code 55.

FUNCTION CODE 150 CONFIGURATION

If the jumpers and dipswitches have been set up for operation with function code 150:

1. Refer to the ***Function Code Application Manual*** for information on configuration instructions.

2. Configure the processor module with function code 150, specifications S1 and S2.

3. Leave the remaining specifications at their default values. They require modification during the module calibration procedure. Refer to Appendix B to calibrate the LVDT transformer and tune the PID controller gain using function code 150.

SECTION 4 - CALIBRATION

INTRODUCTION

This section covers the module calibration procedure, demodulator gain tuning procedure, controller gain tuning procedure and automatic tuning procedure. Tuning and calibrating the module insures accurate positioning of the turbine throttle valve and the best possible frequency response.

Complete the steps in this section before placing the hydraulic servo (HSS) module in operation. The steps in this section apply only to IMHSS03 modules and multi-function processor (MFP) modules configured with function code 55. Refer to ***Appendix B*** for tuning and calibration procedures using function code 150.

The demodulator gain tuning procedure can be done in one of two modes: Manual or automatic. In manual mode, the user performs the tuning procedure step by step. In automatic mode, the HSS module performs the same steps without user action. Demodulator gain and controller gain are independent of each other; therefore, demodulator gain calibration can be done automatically or manually, while controller gain must be done manually. New gain values and any error codes are stored in the function code so that gain values can be viewed via the configuration device display (e.g., engineering work station, OIS monitor).

Perform IMHSS03 tuning and calibration in the following order:

1. Null check (manual only).
2. Demodulator gain tuning (automatic or manual).
3. LVDT calibration (automatic only).
4. Controller gain tuning (manual only).

NULL CHECK

To start the null check procedure, the MFP module must be communicating with the IMHSS03 module. Additionally, the following conditions must exist:

- The turbine is off-line.
- The valve (for turbine hydraulic system) must be in the controlling position and functioning properly.
- The multi-function processor module has function code 55 in its configuration.

- Calibrate mode enable must be set to disable, <S11> = 0.
- LVDT status must be good.

To perform the null check:

1. Go to the block address specified in S7. Set the LVDT null check mode to 1 for the primary LVDT transformer.

2. Go to the block address specified in S11. Set the calibrate mode enable to 1. This places the IMHSS03 module into calibrate mode.

3. Go to the block address specified in S12. Set the GO/HOLD select to 1 (GO).

4. Wait until the selected LVDT transformer at null point flag is set in block output N+7, bit 7.

5. Make the necessary adjustments to the servo valve and the LVDT position to adjust the actuator to its mechanical null position. For maximum LVDT linearity, the LVDT null point should occur at the actuator's midtravel position. When S12 is in the GO mode, the actuator ramps to and holds at the LVDT null point (LVDT secondaries have equal voltages). While the actuator is held at the LVDT null point, the mechanical zero on the LVDT transformer can be adjusted until the actuator is at its midpoint position.

6. If there are redundant LVDT transformers, go to the block address specified in S7. Set the LVDT null check mode to 2 for the backup LVDT transformer.

7. Repeat Steps 4 and 5.

8. When the adjustments are complete, set GO/HOLD select to a 0 (HOLD), set calibrate mode enable to a 0 (DISABLE) and set null check to 0 (DISABLE).

AUTOMATIC TUNING (FUNCTION CODE 55)

To start automatic tuning, the MFP module must be communicating with the IMHSS03 module and the following conditions must be met:

- The turbine is off-line.
- The servo valve or I/H converter (for turbine hydraulic system) must be in the controlling position and functioning properly.
- The multi-function processor module has function code 55 in its configuration.

Demodulator Gain

The HSS module automatically tunes the demodulator gain using the same techniques a technician would use to manually tune the gain. The auto tuning function selects the lowest gain. The actuator moves to the 100 percent and zero percent positions. At each position the LVDT secondary voltage is read. If the 100 percent position secondary voltage is less than 8.5 volts or the zero percent LVDT secondary voltage is greater than -8.5 volts, the demodulator gain is increased. This procedure repeats until the 100 percent position LVDT secondary voltage is greater than 8.5 volts or the zero percent position LVDT secondary voltage is less than -8.5 volts. Then the demodulator gain is set to the next lower value.

The automatic tuning error bit is set if the lowest demodulator gain causes the LVDT secondary voltages to go out of range or the highest demodulator gain causes the LVDT secondary voltages to remain below range (±5 VDC). This error bit indicates that the automatic tuning procedure was unable to provide an optimum gain value. A less than optimum gain value produces inaccurate position feedback information from the LVDT transformer, so corrective action is required.

To automatically tune the demodulator gain:

1. Set the demodulator gain constant to 0, <S16> = 0. This initiates the tuning procedure.

2. Observe the module status on the output block N+6, bits 0 and 1. If these bits have a binary value of 0, tuning is in progress. When tuning is complete, the binary value of these bits is 1.

3. If these bits have a binary value of 3, then an error has occurred during the automatic tuning procedure. All block outputs will show bad quality. The other error bits in the module status output block N+6 and the LVDT status output block N+7 will indicate the error. Refer to Section 6 for corrective action. After correcting the error, repeat the demodulator gain tuning procedure.

> **NOTE:** To clear the automatic tuning of parameters (ATOP) error status and bad output qualities without performing another automatic tuning of parameters, send any new demodulator gain value to the IMHSS03 module.

If an error occurs during tuning, the previous value (before the ATOP procedure was initiated) is displayed as the gain value. If the error occurs while the gain is at the highest or the lowest value, the error is probably an out of range condition. If this happens, the controller gain remains at the out of range value to indicate that the error occurred because of an out of range condition.

Initial Calibration (Function Code 55)

To calibrate the LVDT transformer and actuator with the HSS module, the MFP module must be communicating with the HSS module and the following conditions must be met:

- Demodulator gain tuning must be complete.
- The turbine is off-line.
- The servo valve or I/H converter (for turbine hydraulic system) must be in the controlling position and functioning properly.
- The multi-function processor module has function code 55 in its configuration.
- The calibrate mode enable must be set to disable, <S11> = 0.

To calibrate the HSS module:

1. Verify that the block address specified in S9 contains the proper number of calibration cycles (from 1 to 8).

2. Verify that the block address specified in S8 contains the proper calibration stroke time. Values are selected in seconds. Calibration stroke times under 30 seconds are not recommended for on-line tuning.

3. Go to the block address specified in S11. Set the calibrate mode enable to 1, <S11> = 1. This places the HSS module into calibrate mode.

4. Go to the block address specified in S12. Set the GO/HOLD select to 1 (GO).

5. The HSS module drives the actuator to the 100% position at the selected stroke time specified in <S8>. While the actuator is held against the 100% end of travel, the LVDT differential voltage at 100% is recorded. If redundant LVDT transformers are configured, then the voltage at 100% will be recorded for both LVDT transformers.

After recording the 100% reading, the HSS module drives the actuator to the 0% position at the selected stroke time. While the actuator is held against the 0% end of travel stop, the LVDT differential voltage at 0% is recorded. If redundant LVDT transformers are configured, then the voltage at 0% will be recorded for both LVDT transformers.

NOTE: The position feedback output block N will display the current valve position read by the primary LVDT transformer.

The 100% to 0% cycle repeats the number of calibration cycles specified in <S9>. After recording the final 0% reading, the actuator moves at the selected stroke time to the position demand from the MFP module. When the calibration cycles are complete, the actuator ramps to the position demand from the MFP module if the IMHSS03 module is in the automatic tuning mode. In manual tuning mode, the actuator ramps to its pre-calibration position when the calibration cycles are complete.

Allow the cycle to complete. After completion of all cycles, the calibrated differential voltages are written to HSS module dual-port RAM.

6. Observe the module status output block N+6, bits 0 and 1. The binary value of these bits is 0 while the LVDT calibration is in progress. When the calibration is complete, these bits have a binary value of 1.

If a binary 2 appears in the module status bits, then an error has occurred during the calibration procedure. All outputs will show bad quality and the HSS module will retain the previous calibration values. The other error bits in the module status output blocks N+6 and the LVDT status output blocks N+7 will show which error has occurred. Refer to ***Section 6*** and Table 6-5 for corrective action. After correcting the error, repeat the calibration procedure.

> **NOTE:** To clear the calibration error status and bad output qualities without performing another calibration, set calibrate mode to disable, <S11> = 0.

If the calibration was successful, the MFP reads the new differential voltages from the HSS module. These new values are written to function code 55 specifications S18 through S21. Refer to ***Controller Gain*** to tune the controller gain.

MANUAL TUNING (FUNCTION CODE 55)

The following procedures are for manually tuning demodulator gain and controller gain using function code 55.

Demodulator Gain

To start demodulator tuning, the MFP module must be communicating with the HSS module and the following conditions must be met:

- The demodulator gain must be set to a value of one.
- The controller gain must be set to a value of one.
- The turbine is off-line.

- The servo valve or I/H converter (for turbine hydraulic system) must be in the controlling position and functioning properly.

- The multi-function processor module has function code 55 in its configuration.

To manually tune the demodulator gain:

1. Go to S15 and set it to 1 so that volts are the display units on output block N.

2. Go to the block specified in S6, and set it to 0%.

3. Observe the LVDT secondary voltage at output block N and wait until the value stops changing.

4. If the 0% position value of output block N is greater than -8.5 V, then increase the value of the demodulator gain by setting specification S16 to the next higher gain and repeat Step 3.

5. When the 0% value is less than -8.5 V, decrease the demodulator gain to the next lower setting.

6. Go to the block specified in S6, and set it to the 100% position.

7. Observe the LVDT secondary voltage at the output block N and wait until the value stops changing.

8. If the 100% position at output block N is greater than 8.5 V, then decrease the value of the demodulator gain by setting specification S16 to the next lower gain and repeat Step 7.

9. If the demodulator gain has been changed from the value determined in Step 4:

   a. Go to the block specified in S6, and tune it to 0%.

   b. Observe the LVDT secondary voltage at output block N and wait until the value stops changing. When the value stops changing, read the final value and verify that it is acceptable. None of the LVDT 0% values should be greater than -5 V and none of the LVDT 100% values should be less than 5 V.

10. If there are redundant LVDT transformers, repeat this procedure for the backup LVDT transformer. Select the backup by changing the value of S3 to select the other LVDT transformer. Use the lowest of the two gains for redundant LVDT transformers. Verify that both LVDT transformers are still within range. If any LVDT transformer is not within range, refer to ***Section 6***

and Table 6-5 for information on correcting the LVDT response.

11. Calibrate the LVDT transformer before tuning the controller gain. Refer to ***Initial Calibration (Function Code 55)*** for the LVDT calibration procedure.

Controller Gain

To start controller tuning, the MFP module must be communicating with the IMHSS03 module and the following conditions must be met:

- The controller gain must be set to one.
- Demodulator gain tuning must be complete.
- The turbine is off-line.
- The servo valve or I/H converter (for turbine hydraulic system) must be in the controlling position and functioning properly.
- The multi-function processor module has function code 55 in its configuration.
- The block containing the calibrate mode enable specification is set to disable (S11 = 0).

To manually tune the controller gain:

1. Enter position demands using the block (specified in S6) containing the percent position demand. Enter values of 50%, 75%, and 90%. Observe the response of the valve at each demand level. The valve should respond without oscillating at each level of demand.

2. If the valve operates smoothly at all demand levels, then increase the controller gain to the next higher value and repeat Steps 1 and 2.

3. When the controller gain reaches a point where the valve oscillates at any demand level, decrease the controller gain to the next lower value. Repeat Steps 1 through 3 to verify that the valve operates smoothly at all demand levels. This is the correct controller gain.

SECTION 5 - OPERATING PROCEDURES

INTRODUCTION

This section explains how to place the IMHSS03 Hydraulic Servo Module in operation. This section includes information about the hydraulic servo module (HSS) faceplate LEDs, system start-up and operation, and manual operation.

FACEPLATE LEDS

There are nine LEDs visible through the faceplate of the IMHSS03 module. There is one red/green status LED and eight red LEDs (see Figure 5-1). Three of the red LEDs (one, four and eight) are used during normal operation. During diagnostics, all eight red LEDs indicate pass/fail counts or test number (refer to Section 6 for diagnostic LED states). Refer to Table 5-1 for an explanation of the LED states.

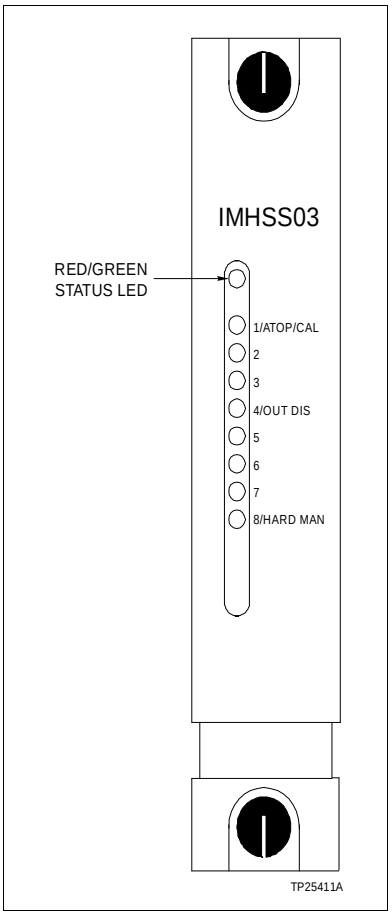

Figure 5-1. Faceplate LEDs

Table 5-1. LED States

Red/Green Status LED	LED 1 ATOP/CAL	LED 4 OUT DIS	LED 8 HARD MAN	Condition
Red	On	On	On	Initial power up. All LEDs are on momentarily.
Off	Off	On	Off	On-board diagnostics during power up.
	Off	Off	On	HSS module waiting for MFP initialization data.
Green	Off	Off	Off	Normal operation.
	On	Off	Off	Automatic tuning of parameters or calibration in progress.
	Off	Off	On	Hard manual mode. The MFP position demand is not equal to the HSS position demand or manual mode is enabled through function code 55.
	Off	On	Off	Servo output disabled (D/A error, all bad LVDT transformers in servo valve mode).
Blinking green	Off	Off	On	MFP module is in configuration mode or failed. HSS module is operating.
Red	Off	On	Off	HSS module failure.

START-UP AND NORMAL OPERATION

Only qualified personnel should perform plant start-up and operation. To start up and operate the HSS module:

1. Start the turbine following the plant start-up procedure.

2. Enter a turbine speed demand or load demand set point via the operator interface.

3. Operation continues according to the system control strategy in the MFP configuration.

HARD MANUAL MODE OPERATION

Operation enters the hard manual mode when the module starts up, an MFP communication failure occurs, or when it is initiated from function code 55. Table 5-1 lists the faceplate LED status when the module enters the hard manual mode. Figure 5-1 shows the module faceplate LEDs. To manually position the throttle valve:

1. Monitor the turbine speed or load through the operator interface.

2. Refer to your plant operating procedure to determine the actuator position needed to maintain turbine speed.

3. To maintain the load (or speed) demand, adjust the hydraulic actuator position by activating the raise or lower contacts (customer installed). The raise contact opens the valve

while the lower contact closes the valve. Use the 4 to 20 milliamp position output to determine the valve position.

4. To return to automatic mode, the MFP module must be communicating with the HSS module. If hard manual mode was selected through function code 55, specification S13 must be returned to auto mode, <S13> = 0. Finally, the operator must match the D/A converter output value (block number N+1) with the current position demand from the MFP module.

NOTE: If the HSS module enters hard manual mode by losing communication to the MFP module, the HSS module will exit hard manual mode when the MFP module establishes communication with the HSS module, and when position demands from the MFP and HSS modules match. The MFP module resumes automatic operation from the valve position held during manual operation.

TURBINE TRIP

Turbine trip provides quick shutdown by providing a way to drive the throttle valve closed. The trip bias circuit overrides position control from the HSS microprocessor and drives the valve closed. To drive the valve closed, close the trip bias switch (customer installed) to apply 24 VDC to the trip bias digital input.

SECTION 6 - TROUBLESHOOTING

INTRODUCTION

This section provides troubleshooting information for the hydraulic servo (HSS) module. This information includes diagnostic testing, alarm and exception reporting, problem reports and troubleshooting flowcharts. Additional reference documents that are helpful for troubleshooting are product instructions for the processor module, the operator interface (i.e., OIS, EWS, etc.) and the ***Function Code Application Manual***.

IMHSS03 FACEPLATE LEDS

There are nine LEDs visible through the IMHSS03 faceplate. The top LED (red/green) indicates communication status between the HSS module and multi-function processor module, and overall status (see Figure 5-1). The next eight LEDs (labeled one through eight) are used for diagnostic purposes. LEDs one, four and eight are used during normal operation to indicate automatic tuning of parameters/calibration, outputs disabled and hard manual mode. Table 5-1 lists the LED states for various operating conditions. In diagnostics mode, the eight red LEDs indicate either pass/fail count or test number and status (pass/fail). Figure 6-1 shows the diagnostic LED display.

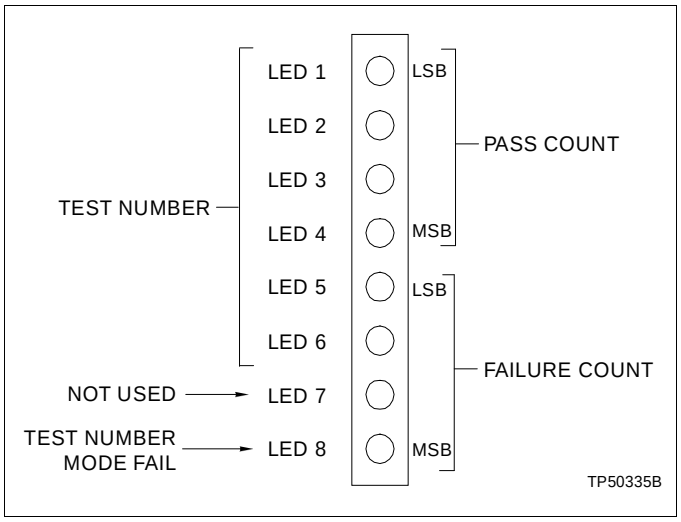

Figure 6-1. Diagnostic LED Display

DIAGNOSTICS

The IMHSS03 module firmware contains diagnostic routines that can be invoked from power up. The diagnostic routines allow verification of the module components and circuitry. When the module is in diagnostic mode, it cannot perform the functions of an IMHSS03 module. Therefore, diagnostics should be used on modules that are off-line.

DIAGNOSTIC DIPSWITCH SELECTION

Pole one of dipswitch S1 puts the IMHSS03 module into diagnostic mode (see Figure 6-2). Poles eight through five of dipswitch S2 select the diagnostic test to run. Pole eight is the least significant bit (binary weight one), pole five is the most significant bit (binary weight eight). Test IDs range from zero to nine. Refer to Table 6-1 for test ID values.

Pole one of dipswitch S2 selects the LED display mode. The pass/fail mode displays a composite of the incrementing pass and fail counters. LEDs one through four indicate the number of passes successfully completed. LEDs five through eight display the number of failures (see Figure 6-1).

The test number mode (pole one of dipswitch S2) displays the diagnostic test number on LEDs one through four. LEDs five through seven are not used; LED eight is the fail LED. The test number and the pass/fail status of the test is displayed upon completion (or failure) of the test. A passing test displays only the test number. A failing test also turns LED eight on to indicate a failure.

Pole two of dipswitch S2 selects the halt on error feature. In this mode, the IMHSS03 module will halt test execution whenever the selected test detects an error. The number of the failing test is displayed on the IMHSS03 LEDs.

The front panel LEDs are used during diagnostic mode operation to display test results. On module reset, all eight LEDs illuminate. Next, the dipswitches are read, the selected test is executed and the result is displayed on the LEDs. The format of the LED display depends upon the setting of dipswitch S2 pole one. If this pole is set to zero (on), the test number is displayed on LEDs one through four. LED eight illuminates if the test fails. The test will repeat. If S2 pole one is set to one (off), a running tally of successes and failures will be displayed on the LEDs. LEDs one through four tally the passes, LEDs five through eight the failures (see Figure 6-1). If a test fails with halt-on error selected (S2, pole two on), the status LED turns red after the test status is displayed.

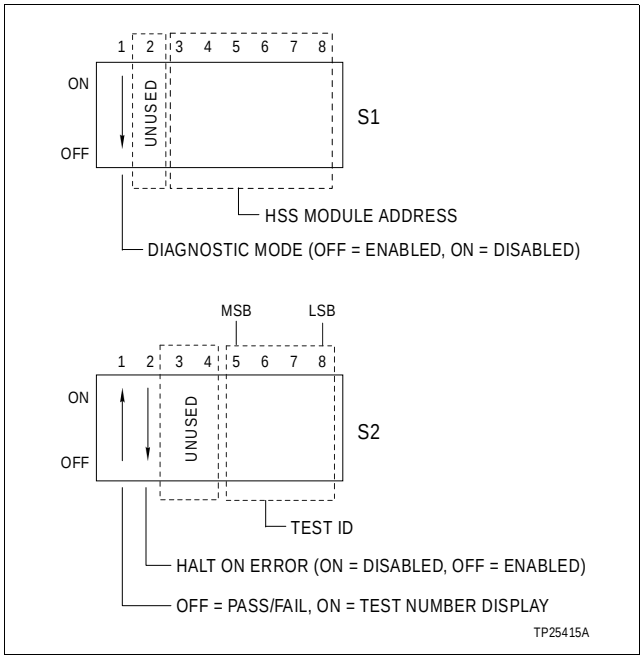

Figure 6-2. Diagnostic Dipswitch Settings

Table 6-1. Diagnostic Test ID Numbers and Dipswitch S2 Settings

Test Name	ID	Dipswitch S2 Pole[1]								Description
		1[2]	2[3]	3	4	5	6	7	8	
Dipswitch and LED test	00	x	y	0	0	0	0	0	0	Increments a count on the LEDs until all are illuminated. The status LED displays a logical and mathematical manipulation of the bytes on dipswitches S1 through S4. Off indicates even parity, green indicates odd parity.
Watchdog timer test	01	x	y	0	0	0	0	0	1	The watchdog timer is started. An error code displays if it does not expire in 15 secs.
ROM test	02	x	y	0	0	0	0	1	0	Verifies the checksum of the EPROM.
SRAM test	03	x	y	0	0	0	0	1	1	Performs a walking ones and zeros test on the static RAM.
Timer test	04	x	y	0	0	0	1	0	0	Initializes the timer and checks its operation.
DPRAM test	05	x	y	0	0	0	1	0	1	Performs a walking ones and zeros test on dual port RAM.
A/D reference test	06	x	y	0	0	0	1	1	0	Checks internal analog-to-digital reference voltages.
Output D/A test	07	x	y	0	0	0	1	1	1	Checks analog output voltages of the 12-bit D/A converter.
Position D/A test	08	x	y	0	0	1	0	0	0	Checks analog output voltages of the 16-bit D/A converter.
Group test (02-08)	09	x	y	0	0	1	0	0	1	Performs tests 2 through 8 in numerical order.

NOTES:
1. 0 = ON or CLOSED, 1 = OFF or OPEN.
2. X = selects LED display mode. See Figure 6-2 for pole 1 settings.
3. Y = selects halt on error or continuously loop the tests. See Figure 6-2 for pole 2 settings.

For a group test (nine), tests two through eight run in numerical order. On a failure, the test number that failed is displayed if the test number display mode is selected. A failure of a test within the group terminates the group test at that point if the halt on error feature is selected. All tests after the failing test will not execute until the fault is removed.

To invoke the IMHSS03 diagnostics:

1. Set dipswitch S1 pole 1 to position 1 (off) to select the diagnostic mode (see Figure 6-2).

2. Set dipswitch S2 pole 1 to select the LED display mode. Figure 6-2 shows the display mode settings.

3. Set dipswitch S2 pole 2 to select the halt on error feature (see Figure 6-2).

4. Set dipswitch S2 poles 8 through 5 to select a test number. Table 6-1 lists the diagnostic tests and their ID number.

5. After correctly setting the dipswitches, reset the module to start diagnostics.

Observe the test results on the IMHSS03 LED display (see Figure 6-1). The selected tests will run repeatedly until the IMHSS03 module is reset. The module will halt diagnostics if an error occurs while the module is in halt on error mode.

ALARM AND EXCEPTION REPORTING

IMHSS03 function codes do not directly generate alarm or exception reports. If exception reporting is required, send the required outputs to standard exception reporting blocks. For more information, refer to the instruction for the operator interface in use.

FUNCTION CODE 55 PROBLEM REPORTS

Function code 55 generates I/O module error reports. These problem reports are report type 12. Function code 55 generates five module problem report error types (refer to Table 6-2).

- Error type 1 - no response/wrong type.
- Error type 2 - calibration error.
- Error type 3 - channel failure/out of range.
- Error type 9 - input failure.
- Error type 12 - output fixed.

Problem reports are broken down into two categories: Major or fatal errors, and minor or nonfatal errors. Fatal errors indicate that the given mode of operation will not function. Fatal errors generate module problem reports having error types one, two

or three. Nonfatal errors indicate that the module has discovered an error but will continue to function. Nonfatal errors generate module problem reports having error types nine and 12.

Table 6-2. Function Code 55 Module Problem Report

Error Type	Module Error	Corrective Action
1 - No response/ wrong type	Any I/O expander bus communication failure. Any command or data checksum failure. Error will also be indicated by FC 55 output N+9.	Check I/O expander bus dipshunts, remove IMHSS03 and reinsert. If error recurs, replace IMHSS03.
	Hardware or D/A error. Error will also be indicated by FC 55 output N+8 or N+6, respectively.	1. Remove IMHSS03. Insert the module. If the error recurs, replace the module. 2. Cause may be isolated by running diagnostics.
2 - Calibration error	A hardware error occurred during calibration or demodulator automatic tuning. Error may also be indicated by FC 55 output N+6. Errors that can cause calibration or automatic tuning to fail are: A/D error (indicated by output N+6). D/A error (indicated by output N+6).	Replace IMHSS03.
	An LVDT error occurred during calibration or demodulator automatic tuning. Error may also be indicated by FC 55 output N+7.	1. Refer to FC 55 output N+7 to isolate error. 2. Check LVDT connections. If error persists, replace indicated LVDT or IMHSS03.
	An error occurred during demodulator automatic tuning. Errors that can cause automatic tuning to fail are: Minimum demodulator gain produced out of range 100% or 0% LVDT values. Maximum demodulator gain produced LVDT spans that are too small.	1. Refer to the value selected by the module in S16 to isolate the error. 2. Adjust the oscillator voltage amplitude, selected with SW5, based on value returned in S16. Retry procedure. If error persists, replace IMHSS03.
	An error occurred during calibration. Errors that can cause calibration to fail are: 100% LVDT value < 0% LVDT value. Servo outputs not saturated at 100% or 0% position.	1. Refer to the values returned by the IMHSS03 in S18 through S21 to isolate the problem. 2. Increase controller gain or decrease demodulator gain. 3. Retry procedure, if error persists, replace IMHSS03.
3 - Channel failure/out of range	Any fatal LVDT failure in servo mode: Only using LVDT 1 (S3=0), and any LVDT 1 error. Only using LVDT 2 (S3=1), and any LVDT 2 error. Redundant LVDTs (S3=2 or 3), and LVDT 1 and LVDT 2 errors.	1. Refer to FC 55 output N+7 to isolate error. 2. Check LVDT connections. If error persists, replace indicated LVDT or IMHSS03.

Table 6-2. Function Code 55 Module Problem Report (continued)

Error Type	Module Error	Corrective Action
3 - Channel failure/out of range *(continued)*	Any fatal servo output failure: Nonredundant servo 1 outputs (S2=0) and both servo 1 coils failed. Nonredundant servo 2 outputs (S2=1) and both servo 2 coils failed. Redundant servo outputs (S2=2 or 3) and all servo coils failed. I/H converter mode and output (S2=4 or 5) 1 coil 1 failure.	1. Refer to quality of FC 55 outputs N+2 through N+5 to isolate the error. 2. Check output field connections and servo valve or I/H converter. If error persists, replace IMHSS03 or indicated servo valve or I/H converter.
9 - Input failure	Any nonfatal LVDT failure: Redundant LVDTs, LVDT 1 as primary (S3=2), and any LVDT 1 error. Redundant LVDTs, LVDT 1 as primary (S3=2), and any LVDT 2 error. Redundant LVDTs, LVDT 2 as primary (S3=3), and any LVDT 1 error. Redundant LVDTs, LVDT as primary (S3=3), and any LVDT2 error. I/H mode (S3=4 or 5) and any LVDT1 error.	1. Refer to FC 55 output N+7 to isolate error. 2. Check LVDT connections. If error persists, replace indicated LVDT or IMHSS03.
	Module A/D error. Error will also be indicated in FC 55 output N+6.	Replace IMHSS03.
12 - Output fixed	Any nonfatal servo output failure: Nonredundant servo 1 outputs (S2=0) and any servo 1 single coil failure (1 or 2). Nonredundant servo 2 outputs (S2=1) and any servo 2 single coil failure. Redundant servo outputs (S2=2 or 3) and one, two or three coil failures.	1. Refer to quality of FC 55 outputs N+2 through N+5 to isolate the error. 2. Check servo field connections and servo valve. If error persists, replace IMHSS03 or indicated servo valve.
	Contingency error. Error will also be indicated in FC 55 output N+6.	Check field connections. Check for valve errors.

FUNCTION CODE 150 PROBLEM REPORTS

Problem reports generated by function code 150 are I/O error reports (report type 12). Function code 150 problem reports generate one error type: Error type 1 - No response/wrong type (refer to Tables 6-3 and 6-4).

TROUBLESHOOTING HARDWARE FAILURES

Effectively troubleshoot a hardware failure by using the flowcharts to isolate the failure (see Figures 6-3 and 6-3). After locating the failure, refer to the text or other reference documents for more information about the failure and the corrective action. Contact the manufacturer for control loop process

hardware troubleshooting information. The first part of this section covers off-line failures. If the failure is preventing calibration, tuning or module start-up, refer to ***OFF-LINE FAILURE*** and the steps of the troubleshooting procedure. The second part covers failures during operation. If the failure occurs during operation, refer to ***ON-LINE FAILURE*** and the steps of the troubleshooting procedure.

NOTE: Troubleshooting involves physical contact with the system, including the handling of boards with electrostatic sensitive devices. To avoid creating additional problems while troubleshooting, always use Bailey's field static kit (part number 1948385_1) when working with the modules. The kit is designed to connect a technician and the static dissipative work surface to the same ground point to prevent damage to the modules by electrostatic discharge.

Table 6-3. Function Code 150 Module Problem Report

Error Type	Module Error	Corrective Action
1 - No response/ wrong type	Any I/O expander bus communication failure. Error will also be indicated by FC 150 output N+11.	Remove IMHSS03 and reinsert. If error recurs, replace IMHSS03.
	Hardware. Error will also be indicated by FC 150 output N+10.	1. Error may be isolated by running module diagnostics. 2. Replace IMHSS03.

Table 6-4. Function Code 150 Output Errors

Output Block	Error Description	Corrective Action
N+2	Actuator position, valve contingency error.	Check field connections. Check the valve.
N+3	A/D or D/A hardware error.	1. Error may be isolated by running module diagnostics. 2. Replace IMHSS03.
N+4, N+5	LVDT error.	Check LVDT and LVDT field connections. If error persists, replace IMHSS03.
N+6, N+7	Servo output error.	Check servo field connections and servo valve. If error persists, replace IMHSS03.
N+10	Module hardware error.	1. Error may be isolated by running module diagnostics. 2. Remove IMHSS03. Insert the module. If error recurs, replace the module.
N+11	I/O module communication/ watchdog error. Any I/O expander bus communication failure.	1. Check I/O expander bus dipshunts. 2. Remove IMHSS03. Insert the module. If error recurs, replace the module.

OFF-LINE FAILURE

This part of the troubleshooting section covers off-line failures and how to troubleshoot those failures. Off-line failures occur during module calibration and are a result of improper or incomplete installation or calibration.

If the HSS module fails to calibrate after completing the installation procedure:

1. Locate the cause of the failure using the troubleshooting flowchart in Figure 6-3.

2. Refer to Table 6-5 for corrective action.

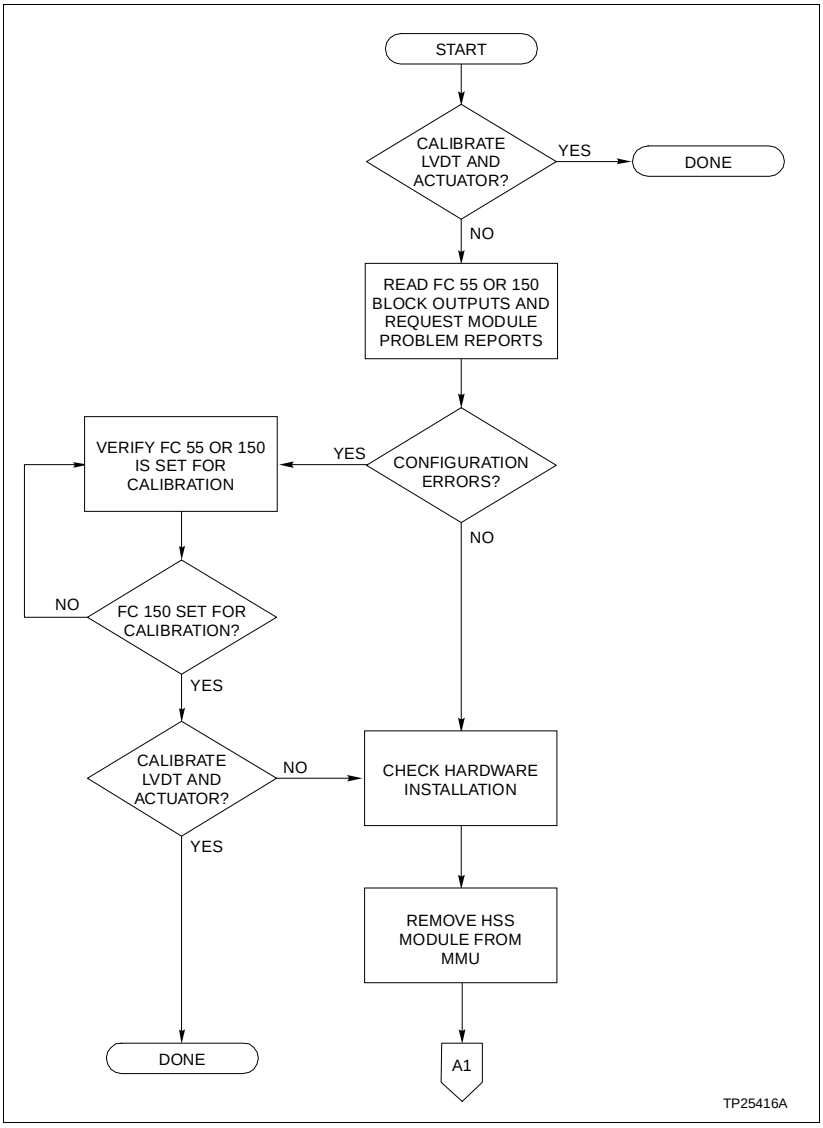

Figure 6-3. Off-Line Failure Troubleshooting Flowchart (Page 1 of 3)

3. If the HSS module continues to fail to calibrate and the failure cannot be located using the troubleshooting flowchart or the steps in Table 6-5, replace the HSS module.

If replacing the module does not correct the problem call Bailey technical support for assistance.

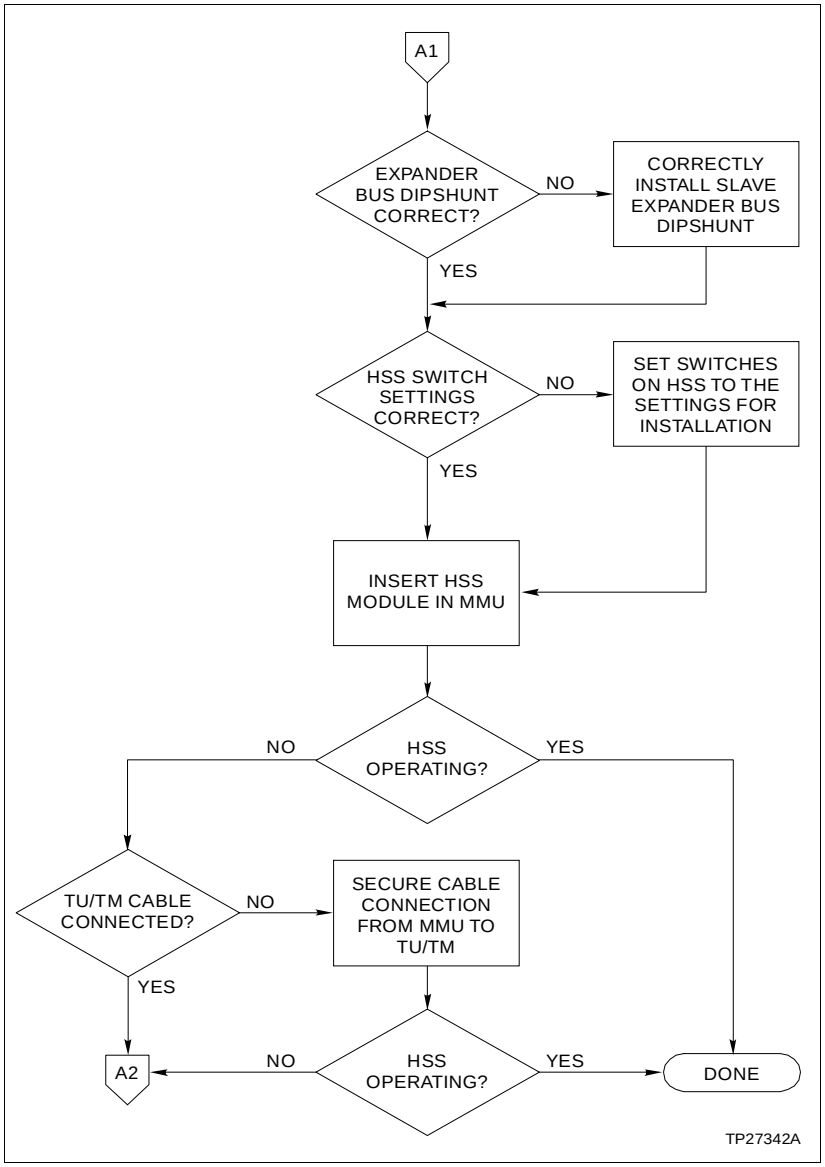

Figure 6-3. Off-Line Failure Troubleshooting Flowchart (Page 2 of 3)

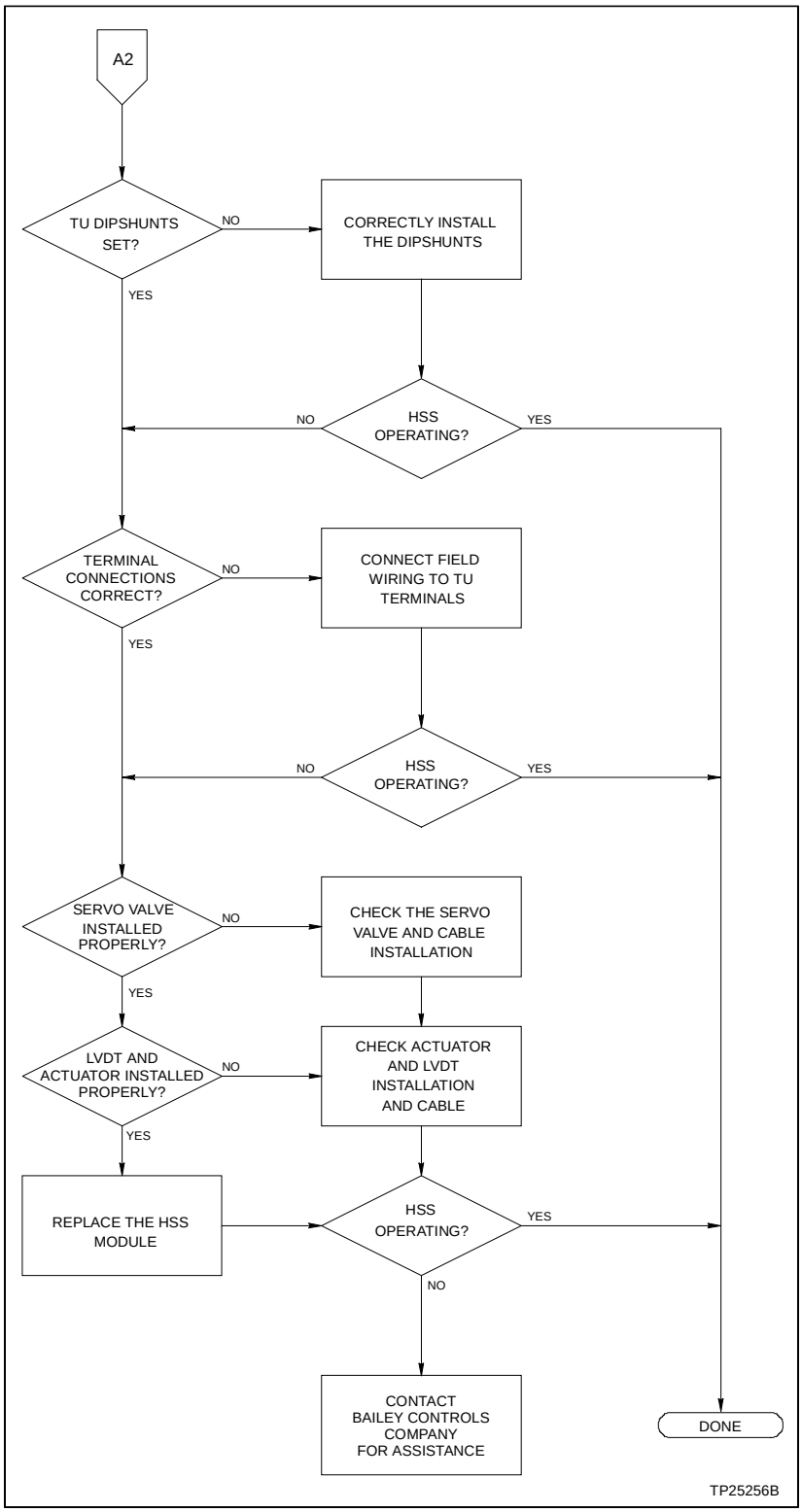

Figure 6-3. Off-Line Failure Troubleshooting Flowchart (Page 3 of 3)

Table 6-5. Troubleshooting Off-Line Failures

Problem	Cause	Corrective Action
IMHSS03 fails to calibrate.	Configuration error.	Check function code 55 or 150 specifications. Verify that function code 55 or 150 is set for calibration.
IMHSS03 fails to calibrate and there are no configuration errors.	Improper installation.	Check the installation of the IMHSS03 and related hardware. 1. Remove the IMHSS03 and check the I/O expander bus dipshunt. All the dipshunt pins should be shorted. 2. Check the dipswitch settings on the IMHSS03. Refer to Section 3 to verify that the dipswitches are properly set for module installation. 3. Insert the module in the MMU. 4. Check the termination cable. a. Verify that the cable is connected to the correct slot on the MMU backplane. b. Verify that the cable connects P3 on the IMHSS03 to P1 on the termination unit or P3 on the termination module. 5. Check the dipshunt settings on the termination unit or the jumper settings on the termination module. Refer to the appendices for dipshunt or jumper settings. 6. Check the process wiring. Verify that the process wiring is connected to the correct terminals on the termination unit or module. Refer to the appendices for terminal assignments. 7. Check the valve, hydraulic actuator, LVDT and installation of the servo related hardware. Contact the manufacturer for information on the servo valve, hydraulic actuator and LVDT.
IMHSS03 fails to calibrate and there are no configuration or installation errors.	Process hardware.	Check the process hardware.
LVDT calibration fails.	LVDT 100% voltage less than LVDT 0% voltage.	Check LVDT connection. Replace LVDT.
Cannot tune demodulator gain.	Primary oscillator amplitude.	Adjust amplitude of primary oscillator.
No servo drive from the servo amplifiers.	Bad connection to the servo valve, defective servo valve.	Check the servo valve. 1. Connect an oscilloscope to the servo valve at the appropriate termination unit or module terminals (SERVO_C_). Connect the oscilloscope probes differentially across the + and – terminals of the servo output. Check the servo outputs by doing Steps 2 through 4. Repeat the procedure for each bad servo output. 2. Enter a position demand to change the actuator position. 3. Verify that there is a servo drive and return signal for each servo output. 4. If there is no servo valve drive signal or return signal, check the continuity of the connecting cables.

Table 6-5. Troubleshooting Off-Line Failures (continued)

Problem	Cause	Corrective Action
No servo drive from the servo amplifiers. *(continued)*	Bad connection to the servo valve, defective servo valve.	5. If the connecting cables are open or show an unusually high impedance, replace the cables. 6. If the cable continuity is good and there is no servo drive output, check the servo valve and replace if defective.
No LVDT primary excitation voltage.	Bad LVDT, bad cable.	Check the LVDT primary. 1. Connect an oscilloscope to the bad LVDT primary at the appropriate termination unit or module terminal (LVDT PWR OUT +). Ground the oscilloscope probe to the system common. Check the LVDT transformers by doing Steps 2 through 5. Repeat the procedure for each LVDT primary. 2. Verify that there is an excitation voltage on the primary side of the LVDT at the selected frequency. 3. Connect the oscilloscope to the return on the bad LVDT primary at appropriate termination unit or module terminal (LVDT PWR OUT -). Ground the oscilloscope probe to the system common. 4. Verify that there is a return signal on the primary side of the LVDT at the selected frequency. 5. If there is no LVDT excitation signal, check the continuity of the connecting cable. 6. If the connecting cables are open or show an unusually high impedance, replace the cables. 7. If the cable continuity is good and there is no LVDT excitation, check the LVDT and replace if defective.
No LVDT secondary response.	Bad connection to the LVDT, bad transformer.	Check the LVDT secondary. 1. Connect an oscilloscope differentially across the bad LVDT secondary at the appropriate termination unit or module terminals (LVDT_ S_). Ground the oscilloscope probe to the system common. Check the servo outputs and return line by doing Steps 2 through 4. Repeat the procedure for each LVDT secondary. 2. Enter a position demand to change the actuator position. 3. Verify that there is a differential voltage on each LVDT secondary at the selected frequency. The differential voltage will change during a position demand. 4. If there is no differential voltage on the LVDT secondaries, check the continuity of the connecting cables. 5. If the cable continuity is good and there is no differential voltage on the LVDT secondaries, check the LVDT and replace if defective.
IMHSS03 fails to calibrate, all process hardware checks good, there are no configuration errors.	IMHSS03 failure.	Replace IMHSS03.
Replacing the IMHSS03 fails to correct the problem.	—	Contact Bailey technical support.

ON-LINE FAILURE

This part of the troubleshooting section covers on-line failures and how to troubleshoot them. On-line failures are those that occur during the course of normal operation.

Module Failure

To check for a module failure:

1. Check the LEDs on the faceplate of the HSS module.

2. Refer to Table 5-1 for a listing of LED states.

Restoring Operation

To restore module operation:

1. Use the troubleshooting flowchart in Figure 6-4 to locate the problem.

2. Refer to Table 6-6 for corrective action.

3. If the HSS module continues to fail after completing Steps 1 and 2, replace the module.

4. If replacing the module does not correct the problem, contact Bailey technical support for assistance.

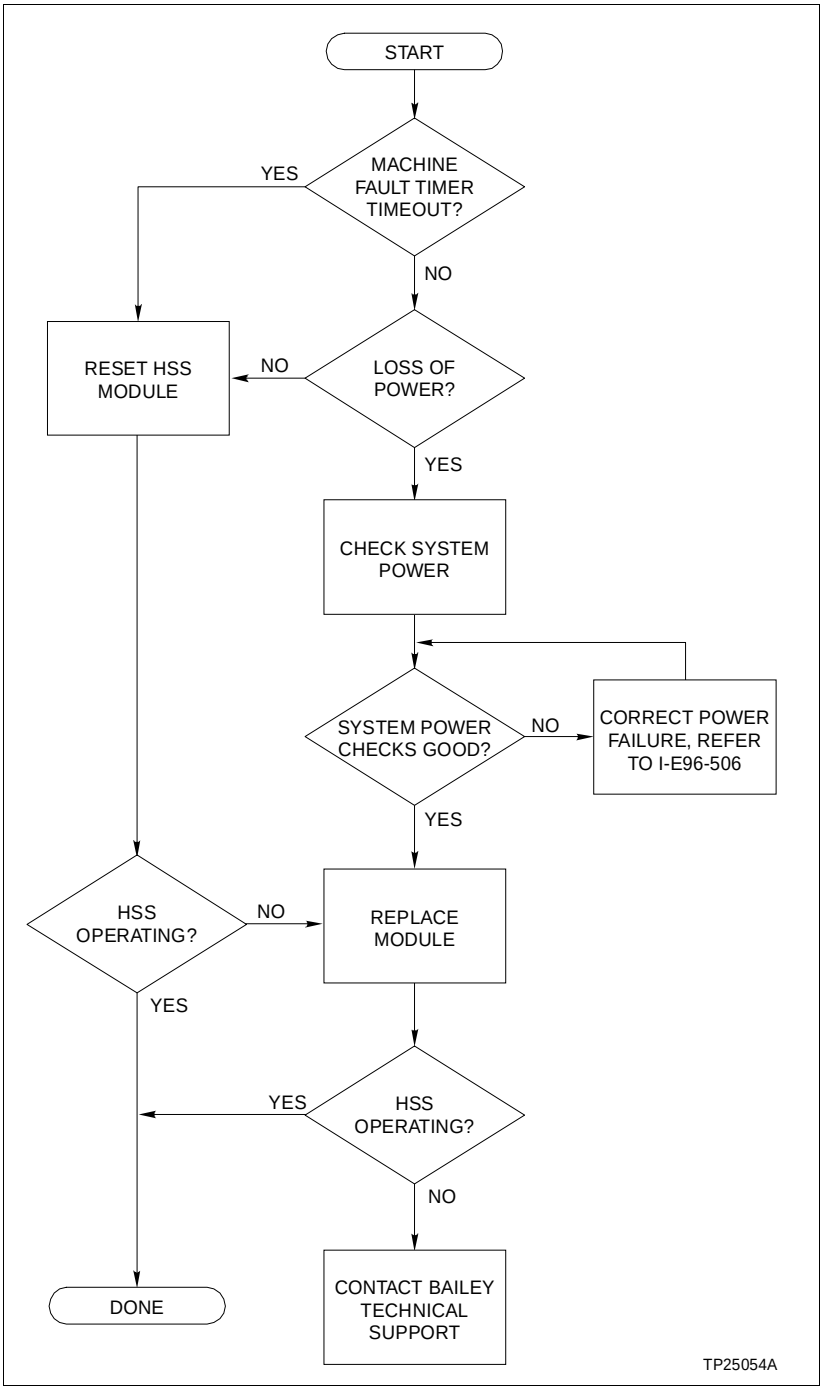

Figure 6-4. On-Line Failure Troubleshooting Flowchart

Table 6-6. Troubleshooting On-Line Failures

Condition	LED/State	Action
Machine fault timer time-out.	Status LED/red and OUT DIS LED/on.	Reset IMHSS03. 1. Turn the thumbscrews on the faceplate ½-turn to unlock the module. 2. Pull on the module faceplate until the module disconnects from the MMU backplane connector. 3. Reseat the module by pushing on the module faceplate until the module connects with the MMU backplane connector. 4. Turn the faceplate thumbscrews ½-turn until the module locks in place.
Reset module and machine fault timer time-out continues.	Status LED/red and OUT DIS LED/on.	Replace IMHSS03. 1. Turn the thumbscrews on the faceplate ½-turn to unlock the module. 2. Pull on the module faceplate, remove the module from the MMU. 3. Refer to Sections 3 and 4 to install and calibrate the replacement module.
Loss of power.	All LEDs off.	1. Remove IMHSS03 and check the system power. 2. Refer to the appropriate power system instruction for troubleshooting procedures.
Loss of power and system power checks good.	All LEDs off.	Replace IMHSS03. 1. Turn the thumbscrews on the faceplate ½-turn to unlock the module. 2. Pull on the module faceplate, remove the module from the MMU. 3. Refer to Sections 3 and 4 to install and calibrate the replacement module.
Actuator positioning alarm and possible bad primary status.	Status LED/green.	Measure the LVDT primary voltage. 1. If the measured oscillator voltage is less than 0.7 V_{RMS} then the LVDT primary has failed. 2. If the voltage is greater than 0.7 V_{RMS} then the LVDT primary is good and some other malfunction within the servo valve, actuator or related component has caused the error.
Actuator positioning alarm and possible bad secondary status.	Status LED/green.	Measure the LVDT secondary voltages. 1. If no voltage is present on one or the other LVDT secondary, that secondary output has failed. 2. If both secondaries have voltage, then the LVDT secondaries are good and some other malfunction has caused the error.

SECTION 7 - MAINTENANCE

INTRODUCTION

The reliability of any stand-alone product or control system is affected by the maintenance of the equipment. Bailey Controls Company recommends that all equipment users practice a preventive maintenance program that will keep the equipment operating at an optimum level.

This section presents procedures that can be performed on-site. These preventive maintenance procedures should be used as guidelines to assist you in establishing good preventive maintenance practices. Select the minimum steps required to meet the cleaning needs of your system.

Personnel performing preventive maintenance should meet the following qualifications.

- Maintenance personnel should be qualified electrical technicians or engineers that know the proper use of test equipment and how to handle electronic circuitry.
- Maintenance personnel should know turbine shutdown and start-up, and plant operating procedures.

PREVENTIVE MAINTENANCE SCHEDULE

Table 7-1 is the preventive maintenance schedule for the IMHSS03 Hydraulic Servo Module. The table lists the preventive maintenance tasks in groups according to their specified maintenance interval. Some tasks in Table 7-1 are self explanatory. Instruction for tasks that require further explanation are covered under ***PREVENTIVE MAINTENANCE PROCEDURES***.

NOTE: The preventive maintenance schedule is for general purposes only. Your application may require special attention.

Table 7-1. Preventive Maintenance Schedule

Task	Frequency
Check the HSS module and module mounting unit for dust. Clean as necessary using an anti-static vacuum.	3 months
Check all signal, power and ground connections associated with the HSS module and its termination unit or module. See procedure.	
Inspect the HSS module and associated termination unit or module, giving particular attention to power supply contacts and edge connectors. Clean as necessary. See procedure.	12 months
Calibrate the LVDT and hydraulic actuator. See procedure.	As needed
Complete all tasks in this table.	Shutdown

EQUIPMENT REQUIRED

The tools and equipment required for the maintenance procedures include:

- Antistatic vacuum.
- Four-inch flat screwdriver (suitable for either termination unit terminals or termination module terminals).
- Isopropyl alcohol (99.5 percent electronic grade).
- Eberhard Faber (400A) pink pearl eraser.
- Fiberglass burnishing brush.
- Lint free cloths.
- ***Function Code Application Manual***.
- Small needle nose pliers.

PREVENTIVE MAINTENANCE PROCEDURES

This section covers tasks from Table 7-1 that require specific instructions or further explanation:

- Checking signal, power and ground connections.
- Cleaning printed circuit boards and edge connectors.
- Calibrating the LVDT transformer and hydraulic actuator.

Checking Connections

WARNING	**There are exposed electrical connections inside the cabinet. These exposed electrical connections present a shock hazard that can cause injury or death.**
AVERTISSEMENT	**L'intérieur de cette armoire contient des bornes électriques qui sont à découvert. Ces bornes électriques à découvert constituent un resque de choc qui pourrait causer blessure ou même la mort.**

Check all signal wiring, power and ground connections for the HSS module and its associated termination unit or module. When checking connections, always turn a screw, nut or other fastening device in the direction to tighten only. If the connection is loose, it will be tightened. If the connection is tight, the tightening action will verify that it is secure. There must not be any motion done to loosen the connection.

NOTE: This preventive maintenance task should be performed while power to the cabinet is off.

1. Check module cable connections.

2. Verify that all power and field wiring connections to the NTHS03 or NTDI01 termination unit, or NIDI01 termination module are secure.

Printed Circuit Board Cleaning

WARNING	**Never clean electrical parts or components with live power present. Doing so exposes you to an electrical shock hazard.**
AVERTISSEMENT	**Ne jamais nettoyer des pièces ou composants électriques dont les circuits sont sous tension; les circuits alimentés pourraient causer un choc électrique.**

WARNING	**Wear eye protection whenever working with cleaning solvents. When removing solvents from printed circuit boards using compressed air, injury to the eyes could result from splashing solvent as it is removed from the printed circuit board.**
AVERTISSEMENT	**Des lunettes de protection devraient être portées lors de travail avec des solvants nettoyants. Lorsqu'on enlève les solvants des circuits imprimés à l'aide d'air comprimé, les éclaboussures de solvant pourraient causer des blessures aux yeux.**

There are several circuit board cleaning procedures in this section. These procedures cover circuit board cleaning and cleaning edge connectors. Use the procedures that meet the needs of each circuit board. Remove all dust, dirt, oil, corrosion or any other contaminant from the circuit board.

Do all cleaning and handling of the printed circuit boards at static safe work stations. Always observe the steps under ***SPECIAL HANDLING*** in Section 3 when handling printed circuit boards.

GENERAL CLEANING AND WASHING

If the printed circuit board needs minor cleaning, remove dust and residue from the printed circuit board surface using clean, dry, filtered compressed air or an antistatic field service vacuum cleaner.

To wash the printed circuit board:

1. Clean the printed circuit board by spraying or wiping it with isopropyl alcohol (99.5% electronic grade). Use a foam tipped swab to wipe the circuit board.

2. Remove excess solvent by using compressed air to blow it free of the circuit board.

EDGE CONNECTOR CLEANING

To clean edge connector contacts:

1. Use a solvent mixture of 80% isopropyl alcohol (99.5% electronic grade) and 20% distilled water.

2. Soak a lint free cloth with the solvent mixture.

3. Work the cloth back and forth parallel to the edge connector contacts.

4. Repeat with a clean cloth that is soaked with the solvent mixture.

5. Dry the edge connector contact area by wiping with a clean lint free cloth.

To clean tarnished or deeply stained edge connector contacts:

1. Use an Eberhard Faber (400A) pink pearl eraser, or equivalent to remove tarnish or stains. Fiberglass or nylon burnishing brushes may also be used.

2. Minimize electrostatic discharge by using the 80/20 isopropyl alcohol/water solution during burnishing.

3. Do not use excessive force while burnishing. Use only enough force to shine the contact surface. Inspect the edge connector after cleaning to assure no loss of contact surface.

CLEANING FEMALE EDGE CONNECTORS

1. Use a foam tipped swab or a lint free cloth wrapped over a piece of scrap circuit board. Soak the swab or cloth in electronic grade isopropyl alcohol.

2. Insert the swab of cloth covered circuit board into edge connector and work it back and forth to clean the contacts.

3. Rinse the edge connector contacts by spraying with isopropyl alcohol.

4. Remove excess alcohol and dry using compressed air.

LVDT and Hydraulic Actuator Calibration

Calibrate the LVDT transformer and hydraulic actuator if servo valve or I/H converter positioning errors occur. Refer to Section 4 for calibration procedures.

SECTION 8 - REPAIR/REPLACEMENT PROCEDURES

INTRODUCTION

Repair procedures are limited to module replacement. If the IMHSS03 Hydraulic Servo Module fails, remove and replace it with another. Refer to Table 8-1 for a list of spare parts and part numbers.

Table 8-1. Spare Parts List

Part Number/ Nomenclature	Description
IMFCS01	Frequency counter module
IMHSS03	Hydraulic servo module
IMMFP01/02/03	Multi-function processor modules
NIDI01	Digital I/O termination module (2 required for full IMHSS03 functionality, 1 required for IMHSS02 functionality)
NKAS02/12	Termination module cable, IMHSS03 to 2 NIDI01 termination modules
NKHS03/13	Termination unit cable, IMHSS03 to NTHS03 and IMHSS03 to NTDI01
NTDI01	Digital I/O termination unit (IMHSS02 functionality only)
NTHS03	Hydraulic servo termination unit
1946715_8	Dipshunt
1946984_1	Jumper
194776_13001	3 A, 250 V slo blo fuse (for NTDI01)
1948182_33001	3 A, 250 V slo blo fuse (for NTHS03)
435862_1	Dipshunt cutting tool (Amp Incorporated part number)

NOTE: It is impractical to specify a recommended quantity of spare parts because Bailey custom designs every system. Contact Bailey for help determining the quantity of spare parts to keep on hand for your particular system.

MODULE REPLACEMENT

If it is determined that the hydraulic servo (HSS) module is faulty, replace it with a new one. Do not attempt to repair the module by replacing discrete circuit components. Replacing components may affect the module performance and certification. The HSS module can be removed while the turbine is on-line provided there are other turbine speed control valves operating that can shut down operation if necessary.

To replace the HSS module:

1. Turn the 2 latching screws on the HSS module ½-turn either way to release the module.

2. Grasp the screws and slide out the module.

3. Set dipswitches S1 through S5 and jumpers J1 through J31 to the proper settings. Tables 3-1 through 3-6 list the dipswitch and jumper setting options.

4. Hold the module by the faceplate and slide it into its assigned slot; push until the rear edges of the module are seated in the backplane connectors.

5. Turn the 2 latching screws ½-turn to lock the modules in place. The module is locked into the module mounting unit when the open end of the slots on the latching screws faces the center of the module faceplate.

TERMINATION UNIT/MODULE REPLACEMENT

To replace the NTHS03 or NTDI01 termination unit, refer to the repair/replacement procedures section in the applicable termination unit product instruction. To replace the NIDI01 termination module, refer to the repair/replacement procedures section in its product instruction. These instructions contain step by step replacement procedures and a spare parts list. Table 7-1 also lists fuse part numbers for the termination units.

SECTION 9 - SUPPORT SERVICES

INTRODUCTION

Bailey Controls Company is ready to help in the use and repair of its products. Contact the nearest sales office to make requests for sales, applications, installation, repair, overhaul and maintenance contract services.

REPLACEMENT PARTS AND ORDERING INFORMATION

When making repairs at your facility, order replacement parts from a Bailey Controls Company sales office. Provide the following information:

1. Part description, part number and quantity.

2. Model and serial numbers (if applicable).

3. Bailey instruction number, page number and reference figure that identifies the part.

Order parts without commercial descriptions from the nearest Bailey Controls Company sales office.

TRAINING

Bailey Controls Company has a modern training facility available for training your personnel. On-site training is also available. Contact a Bailey Controls Company sales office for specific information and scheduling.

TECHNICAL DOCUMENTATION

Additional copies of this manual, or other Bailey Controls Company manuals, can be obtained from the nearest Bailey Controls Company sales office at a reasonable charge.

APPENDIX A - QUICK REFERENCE GUIDE

INTRODUCTION

Appendix A contains a quick reference guide of IMHSS03 dipswitch and jumper settings, and operating LED states. Tables A-1 through A-5 list the operating options selected by setting the IMHSS03 dipswitches. Table A-6 lists operating options selected by setting jumpers. Table A-7 lists IMHSS03 LED states.

IMHSS03 DIPSWITCH AND JUMPER SETTINGS

Table A-2 lists demodulator gain settings. Table A-3 lists controller gain settings. The gain values in these tables apply to modules configured with function code 150. For gain values of modules using function 55, refer to the ***Function Code Application Manual***. To start demodulator tuning using function code 55, set the demodulator gain (dipswitch S2) to two. To start controller tuning using function code 55, set the controller gain (dipswitch S3) to one.

Table A-1. Dipswitch S1, I/O Expander Bus Address Example Settings

Example Address	Dipswitch Pole (Binary Value)							
	1 (128)	2 (64)	3 (32)	4 (16)	5 (8)	6 (4)	7 (2)	8 (1)
15	0	0	0	0	1	1	1	1
32	0	0	1	0	0	0	0	0
63	0	0	1	1	1	1	1	1

NOTE: 0 = CLOSED or ON, 1 = OPEN or OFF.

Table A-2. Dipswitch S2, Demodulator Gain

Gain	Dipswitch Pole							
	1	2	3	4	5	6	7	8
2.0	1	1	1	1	1	1	1	0
5.5	1	1	1	1	1	1	0	1
10.0	1	1	1	1	1	0	1	1
21.1	1	1	1	1	0	1	1	1
48.8	1	1	1	0	1	1	1	1
72.0	1	1	0	1	1	1	1	1
100.9	1	0	1	1	1	1	1	1
152.0	0	1	1	1	1	1	1	1

NOTE: 0 = CLOSED or ON, 1 = OPEN or OFF.

Table A-3. Dipswitch S3, Controller Gain

Gain	Dipswitch Pole							
	1	2	3	4	5	6	7	8
1.00	1	1	1	1	1	1	1	0
2.00	1	1	1	1	1	1	0	1
5.00	1	1	1	1	1	0	1	1
10.50	1	1	1	1	0	1	1	1
13.35	1	1	1	0	1	1	1	1
14.46	1	1	0	1	1	1	1	1
18.10	1	0	1	1	1	1	1	1
20.52	0	1	1	1	1	1	1	1

NOTE: 0 = CLOSED or ON, 1 = OPEN or OFF.

Table A-4. Dipswitch S4, LVDT Oscillator Frequency

Frequency (kHz)	Dipswitch Pole	
	1	2
1.0	1	1
2.5	1	0
5.0	0	0
10.0	0	1

NOTE: 0 = CLOSED or ON, 1 = OPEN or OFF.

Table A-5. Dipswitch S5, Dither Oscillator Frequency/Amplitude and LVDT Oscillator Amplitude

Setting	Dipswitch Pole							
	1	2	3	4	5	6	7	8
Dither oscillator frequency = 300 Hz	0	1						
Dither oscillator frequency = 200 Hz	1	0						
Dither amplitude = 5% of current output			0	1				
Dither amplitude = 10% of current output			1	0				
Dither disabled			1	1				
LVDT oscillator amplitude = 2.1 Vpp					0	0	0	0
LVDT oscillator amplitude = 2.6 Vpp					0	0	1	0
LVDT oscillator amplitude = 3.6 Vpp					0	1	1	0
LVDT oscillator amplitude = 4.5 Vpp					0	1	1	1
LVDT oscillator amplitude = 5.4 Vpp					1	0	0	1
LVDT oscillator amplitude = 6.0 Vpp					1	0	1	0
LVDT oscillator amplitude = 7.7 Vpp					1	1	0	0
LVDT oscillator amplitude = 9.0 Vpp					1	0	1	1
LVDT oscillator amplitude = 13.5 Vpp					1	1	0	1
LVDT oscillator amplitude = 18.0 Vpp					1	1	1	0

NOTE: 0 = CLOSED or ON, 1 = OPEN or OFF.

Table A-6. Jumpers J1 through J31

Function	Jumper Position	Jumper
Normal LVDT configuration	1-2	J1-J5
4 - 40 mA input (I/H converter contingency error, LVDT 2_1)	2-3	
Servo valve mode	1-2	J6, J7, J26
I/H converter mode	2-3	
20 - 160 mA I/H converter	1-2	J8
	2-3	J9-J13, J18-J21
	3-4	J14-J17, J22-J25
4 - 20 mA I/H converter	1-2	J9
	2-3	J8, J10-J13, J18-J21
	3-4	J14-J17, J22-J25
±8 mA servo outputs	1-2	J10, J18
	2-3	J8, J9, J11-J14, J19-J22
	3-4	J15-J17, J23-J25
±16 mA servo outputs	1-2	J10, J11, J18, J19
	2-3	J8, J9, J12-J15, J20-J23
	3-4	J16, J17, J24, J25
±24 mA servo outputs	1-2	J10-J12, J18-20
	2-3	J8, J9, J13-J16, J21-J24
	3-4	J17, J25
±32 mA servo outputs	1-2	J10-J13, J18-J21
	2-3	J8, J9, J14-J17, J22-J25
±40 mA servo outputs (servo1/C1 and servo2/C1 outputs only)	1-2	J10-J14, J18-J22
	2-3	J8, J9
	3-4	J15-J17, J23-J25
±48 mA servo outputs (servo1/C1 and servo2/C1 outputs only)	1-2	J10-J15, J18-J23
	2-3	J8, J9
	3-4	J16, J17, J24, J25
±56 mA servo outputs (servo1/C1 and servo2/C1 outputs only)	1-2	J10-J16, J18-J24
	2-3	J8, J9
	3-4	J17, J25
±64 mA servo outputs (servo1/C1 and servo2/C1 outputs only)	1-2	J10-J25
	2-3	J8, J9
AC LVDT (sine wave output to primary)	1-2	J27-J30
DC LVDT (15 VDC output for LVDT power)	2-3	
Normal operation	1-2	J31
Microcontroller clock disabled (internal test only)	open	

NOTE: To enable a function, place jumper straps over (short) the required jumper positions.

LED STATES

Table A-7 lists IMHSS03 LED states under normal operation.

Table A-7. LED States

Red/Green Status LED	LED 1 ATOP/CAL	LED 4 OUT DIS	LED 8 HARD MAN	Condition
Red	On	On	On	Initial power up. All LEDs are on momentarily.
Off	Off	On	Off	On-board diagnostics during power up.
	Off	Off	On	HSS module waiting for MFP initialization data.
Green	Off	Off	Off	Normal operation.
	On	Off	Off	Automatic tuning of parameters or calibration in progress.
	Off	Off	On	Hard manual mode. The MFP position demand is not equal to the HSS position demand or manual mode is enabled through function code 55.
	Off	On	Off	Servo output disabled (D/A error, all bad LVDT transformers in servo valve mode).
Blinking green	Off	Off	On	MFP module is in configuration mode or failed. HSS module is operating.
Red	Off	On	Off	HSS module failure.

APPENDIX B - FUNCTION CODE 150 CALIBRATION

INTRODUCTION

Appendix B covers the IMHSS03 calibration procedure using function code 150, analog control loop tuning theory and the controller gain tuning procedure. Completing the steps in this appendix insures accurate positioning of the turbine throttle valve and the best possible frequency response. Complete the steps in this appendix before placing the hydraulic servo module (HSS) in operation.

INITIAL CALIBRATION

Before beginning the module calibration procedure:

1. Obtain the following documents and have them on hand:

   a. ***Function Code Application Manual***.

   b. The instruction manual for the operator interface (i.e., EWS, OIS, etc.).

2. Verify that the following conditions exist:

   a. The valve (for turbine hydraulic system) must be in the controlling position and functioning properly.

   b. The controller or processor module has function code 150 in its configuration.

   c. The HSS controller gain (dipswitch S3) is set to 1 (pole 8 is closed).

   d. The HSS demodulator gain (dipswitch S2) is set to 2 (pole 8 is closed).

   e. The turbine should be off-line.

   f. If the turbine is on-line, there must be other controlling valves operating to compensate for position changes of the valve in calibration.

To calibrate the HSS module:

1. Verify that the block address specified in S7 contains the proper number of calibration cycles (from 1 to 8).

2. Verify that the block address specified in S6 contains the desired calibration cycle time. Values are 1 (30 seconds), 2 (60 seconds), 3 (35 minutes) and 4 (70 minutes). 30 and 60

seconds are fast cycle times and are not recommended if the turbine is on-line.

3. Go to the block address specified in S3. Set the calibration command bit to 1. This places the HSS module in the calibrate mode.

4. Read the value of S8 with the valve in the 0% position (closed).

5. If the value of S8 is between 0 and -8.5 VDC, remove the HSS module and increase the demodulator gain (dipswitch S2) to the next higher value. For example, if the gain is 2 (pole 8 closed), change the gain to 5.5 (close pole 7, open pole 8). Table 3-2 lists the gain associated with each dipswitch pole.

6. Insert the HSS module in the module mounting unit.

7. Continue reading S8 and increase the demodulator gain until S8 displays a value of -8.5 VDC to -10.0 VDC. Record the date, time, demodulator gain and names of personnel tuning the demodulator gain in the space provided in Table B-1. Update the information every time the demodulator gain is tuned.

8. Go to the block address specified in S5. Set the linear variable differential transformer (LVDT) null bit to 1.

9. Go to the block address specified in S4. Set the GO/HOLD select bit to 1.

10. Monitor the output block (n+1) until it has a value of 1. This indicates the actuator is at the null point.

11. Make the necessary adjustments to the servo valve and the LVDT position to adjust the actuator to its mechanical null position.

For maximum LVDT linearity, the LVDT null point should occur at the actuators midtravel position. When S4 is in the GO mode, the actuator ramps to and holds at the LVDT null point (LVDT secondaries have equal voltages). While the actuator is held at the LVDT null point, the mechanical zero on the LVDT transformer can be adjusted until the actuator is at its mid-travel position.

12. After LVDT zeroing, turn the null check mode off (S5=0). The HSS module drives the actuator to the 100% position at the selected stroke time (S6). While the actuator is held against the 100% end of travel, function code 150 stores the LVDT differential voltage at 100% in specification S9.

After recording the 100% reading, the HSS module drives the actuator to the 0% actuator position at the selected stroke

time. While the actuator is held against the 0% end of travel stop, function code 150 records the LVDT differential voltage at 0% in specification S8. After recording the 0% reading, the actuator moves at the selected stroke time to the position demand from the multi-function processor module. The 100% to 0% cycle repeats if the number of calibration cycles specified in S7 is more than 1. When the calibration cycles are complete, the actuator ramps to the position demand from the multi-function processor module.

13. Allow the cycle to complete. Specifications S8 (0%) and S9 (100%) store the value of the LVDT differential voltages determined during the calibration cycle. The new values replace the initial values or previous calibration values.

ANALOG CONTROL TUNING THEORY

Because there are many aspects of a control loop that affect the system response, it is impractical to develop a mathematical model to calculate the optimum controller gain. Control loop characteristics that affect the system response are:

1. The characteristics of the servo valve, LVDT transformer and hydraulic actuator such as operating specifications, impedance tolerances, line loses, hydraulic system efficiency, actuator spring tolerance and transformer performance.

2. Lag time inherent in a closed loop (feedback) control system.

Response time and system stability are the primary concerns in determining the controller gain. The objective of analog control tuning is to have a high frequency response while maintaining system stability. The hydraulic servo module is a proportional plus integral plus derivative controller (PID). PID controllers readily meet the analog control tuning objectives. The derivative action of PID controllers increases and stabilizes the frequency response by compensating for lag time in the control loop.

PID controllers are complex and tuning them is difficult. The most common method (90 to 95 percent of the time) of tuning PID controllers is the trial and error or practical method. The HSS module is designed with the derivative and integral action constant (not tunable). Tuning is accomplished by changing the proportional gain. Increasing the proportional gain decreases system stability and increases frequency response. The practical method finds the gain that is one level below the gain that causes instability (oscillation).

TUNING THE CONTROLLER GAIN

The practical method of setting controller gain requires an individual with turbine control experience. The individual tuning the system should be familiar with plant operation under normal conditions, know turbine start-up procedures and have experience in tuning control systems. In cases where the valve is a distance from the control cabinet or separated by barriers, two people are needed to tune the system. One person observes the valve operation while the other person sets the controller gain and enters position demand. Communication by telephone or intercom is recommended. The radio frequency interference from walkie-talkies can cause problems with the control system. Exercise extreme care if using a walkie-talkie. When keying the unit, the operator should be at least two meters away from the cabinet and the cabinet doors closed.

Before tuning the controller gain, verify that the following conditions exist:

1. Calibration of the HSS module, hydraulic actuator and LVDT transformer is complete.

2. The controller gain is set to 1 (dipswitch S3 pole 8 is closed). Refer to Table 3-3 for controller gain switch settings.

3. The calibration command bit in the block address specified in S3 is set to 0 (normal operation).

4. The GO/HOLD bit in the block address specified in S4 is set to 0 (HOLD).

5. The turbine is off-line.

To tune the controller gain:

1. Enter position demands (via the operator interface) of 25%, 50%, 75% and 90%, opening the valve. Observe the response of the throttle valve at each demand level. The valve should respond without oscillating at any level of demand.

2. Enter position demands (via the operator interface) of 25%, 50%, 75% and 90%, closing the valve. Observe the response of the throttle valve at each demand level. The valve should respond without oscillating at each level of demand.

3. Check valve operation. If the valve operates smoothly at all demand levels, continue. If the valve oscillates go to Step 7.

4. Remove the HSS module and raise the controller gain (switch 2) to the next setting. For example, if the gain is 1 (pole 8 is closed), change the gain to 2 (close pole 7, open pole 8).

5. Insert the module in the MMU card cage.

6. Repeat Steps 1 through 3.

7. If the valve oscillates at any demand level, remove the HSS module and lower the gain (dipswitch S2) to the next setting. For example, if the gain is 13 (pole 4 is closed), change the gain to 10 (close pole 5, open pole 4).

8. Insert the module in the MMU card cage.

9. Repeat Steps 1 and 2 to check valve operation at each demand level. The controller gain is set when this point is reached and smooth valve operation is obtained.

10. Record the date, time, controller gain setting and the names of the personnel tuning the controller in the space provided in Table B-1. Update the controller tuning log when making any adjustment in controller tuning.

NOTE: Do not start operating the HSS module until S3 of function code 150 is reset to 0. A calibration cycle could start if the module is reset and S3 is set to 1.

ON-LINE CALIBRATION

On-line calibration with function code 150 is possible when there are other controlling valves on-line that are operating properly. The HSS modules for those valves will compensate for the repositioning of valve and actuator in calibration. Use a calibration cycle time of 35 minutes or more when doing an on-line calibration. To do an on-line calibration, refer to ***INITIAL CALIBRATION*** and do the steps of the servo valve and actuator calibration procedure.

Table B-1. Controller Tuning Log

Date	Time	Demodulator Gain	Controller Gain	Name of Personnel Tuning System

APPENDIX C - NTHS03 TERMINATION UNIT

INTRODUCTION

The IMHSS03 module uses an NTHS03 Hydraulic Servo Termination Unit to terminate its I/O connections. Dipshunts and jumpers select the power source (system power or external power) for certain inputs and outputs. The IMHSS03 module has four analog inputs, nine analog outputs, three digital inputs and one digital output that terminate at the NTHS03 termination unit.

QUICK REFERENCE

Appendix C serves as a quick reference of NTHS03 I/O terminal assignments, jumper and dipshunt settings, circuit board layout and cable connections. Refer to the ***Hydraulic Servo Termination Unit (NTHS03)*** instruction for more information.

Figure C-1 shows the NTHS03 circuit board layout. Table C-1 lists NTHS03 jumper settings. Table C-2 lists the termination

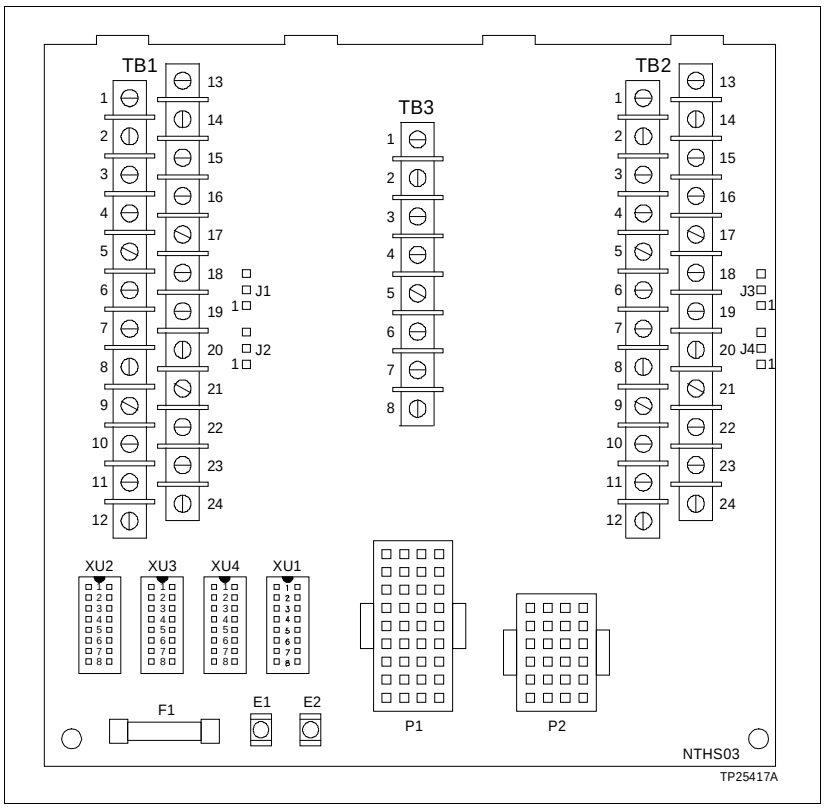

Figure C-1. NTHS03 Circuit Board Layout

unit dipshunt settings. Figure C-2 shows terminal assignments and I/O signal polarity. Figure C-3 shows the termination unit cable connection.

Table C-1. NTHS03 Jumper Settings

Option	Jumper Setting	Jumpers
IMHSS03 powers LVDT	1-2	J1-J4
External supply powers LVDT	2-3	

Table C-2. NTHS03 Dipshunt Settings

Dipshunt	I/O Signal	Dipshunt Strap															
		24 VDC System Power								24 VDC External Power							
		1	2	3	4	5	6	7	8	1	2	3	4	5	6	7	8
XU1	Hard manual	1	0	0	0	0	1	0	1	0	0	0	1	1	0	0	0
XU2	Lower contact																
XU3	Raise contact																
XU4	Trip bias																

NOTE: 0 = open or cut dipshunt strap, 1 = shorted or intact dipshunt strap.

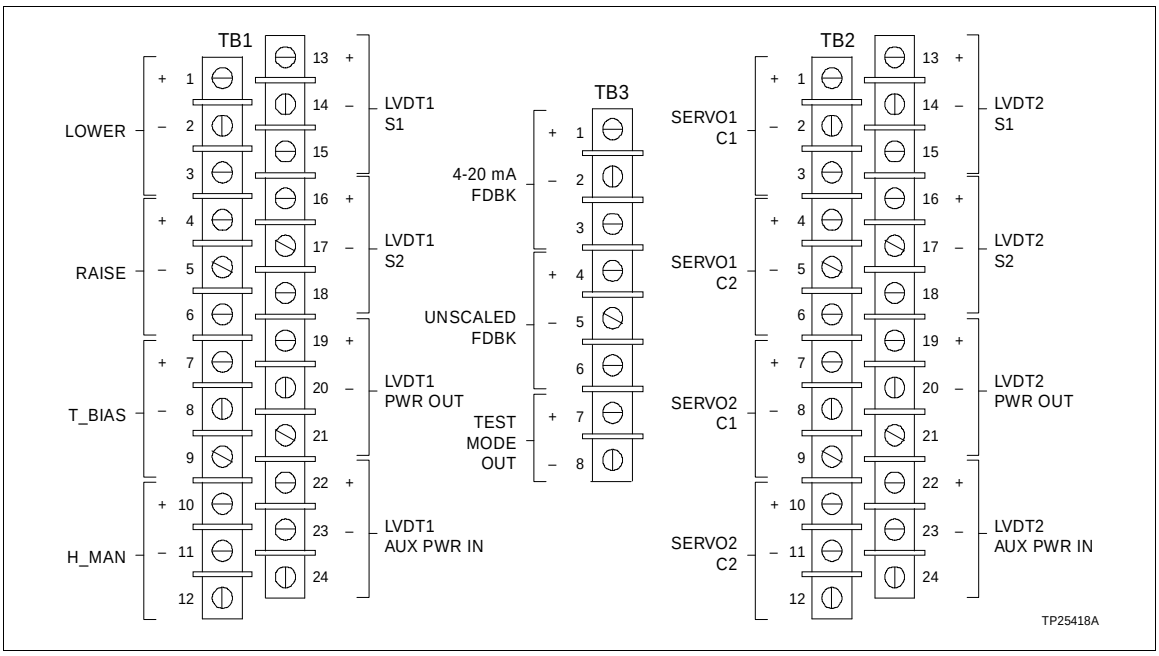

Figure C-2. NTHS03 I/O Terminal Block Assignments

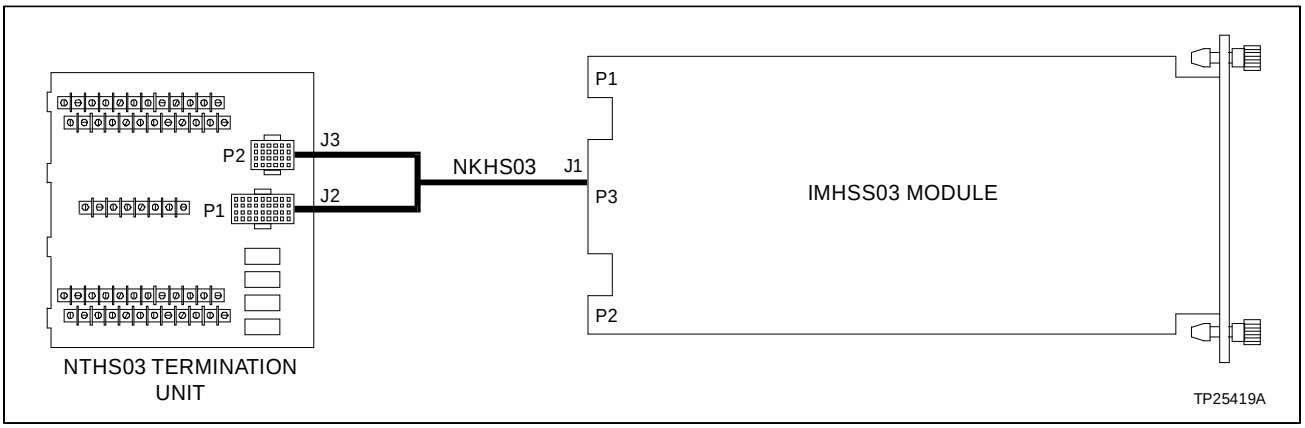

Figure C-3. NTHS03 Termination Cable Connection

APPENDIX D - NIDI01 TERMINATION MODULE

INTRODUCTION

The IMHSS03 module can use an NIDI01 Digital I/O Termination Module to terminate its I/O connections. Full IMHSS03 functionality requires two NIDI01 modules with an NKAS02 termination cable. One NIDI01 module can terminate the IMHSS03 module, but will only provide IMHSS02 functionality. Jumpers on the termination module configure the I/O signals. The IMHSS03 module has four analog inputs, nine analog outputs, three digital inputs and one digital output that terminate at the NIDI01 termination module.

QUICK REFERENCE

Appendix D serves as a quick reference of NIDI01 I/O terminal assignments, jumper settings, circuit board layout and cable connections. Refer to the ***Digital Input Termination Module (NIDI01)*** instruction for more information.

Figure D-1 shows the NIDI01 circuit board layout and required jumper settings. Figure D-2 shows the terminal assignments and I/O signal polarity. Figure D-3 shows termination cable connections.

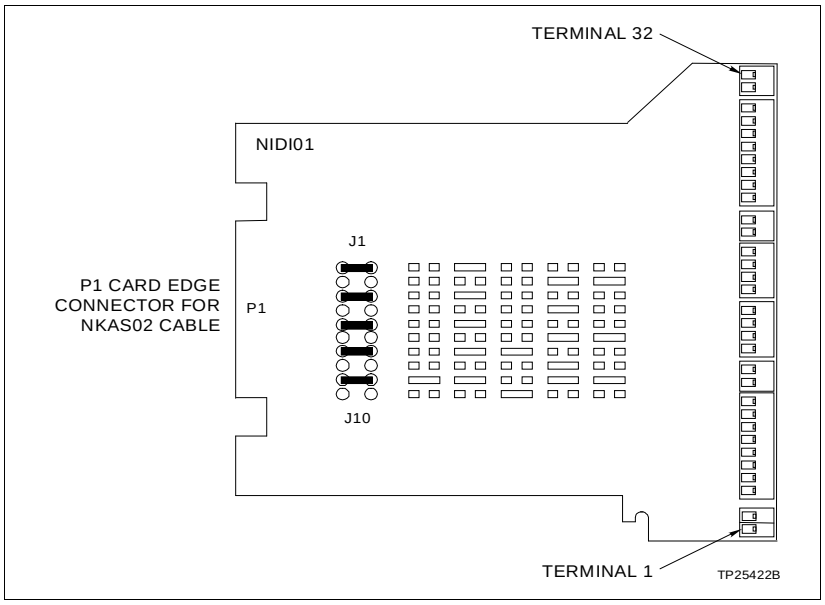

Figure D-1. NIDI01 Circuit Board Layout

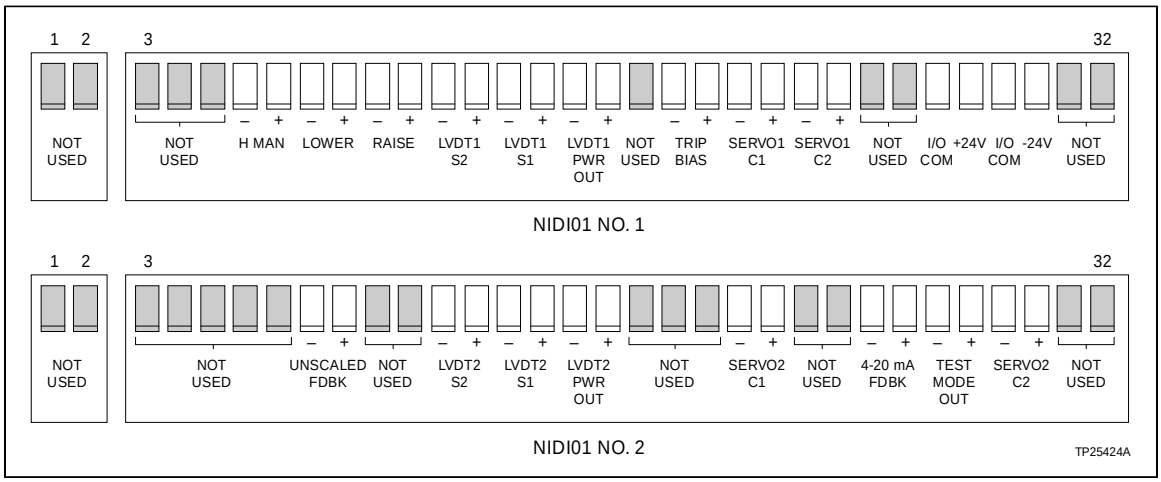

Figure D-2. NIDI01 I/O Terminal Block Assignments

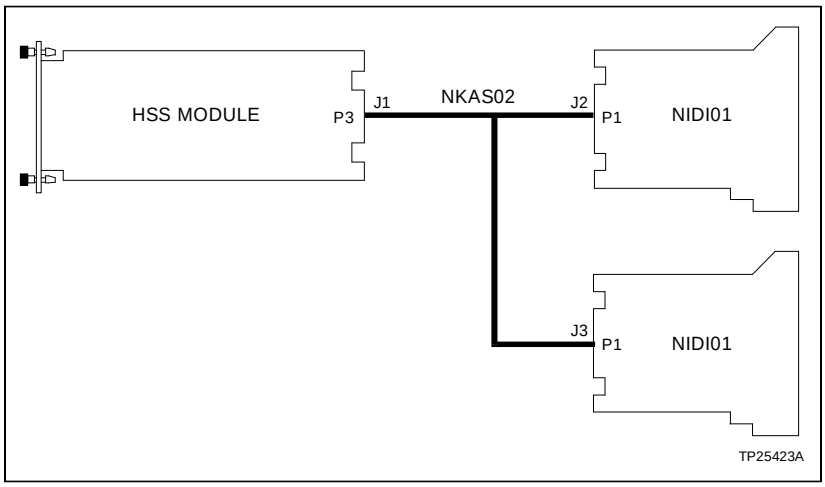

NOTE: Use termination unit cable connector J2 when terminating the IMHSS03 module with one NIDI01 termination module. The J3 connector should be secured out of the way with a cable tie. One NIDI01 termination module can only provide termination for IMHSS02 functionality.

Figure D-3. NIDI01 Termination Cable Connection

APPENDIX E - NTDI01 TERMINATION UNIT

INTRODUCTION

The IMHSS03 module can use an NTDI01 Digital I/O Termination Unit to terminate its I/O connections, but will only have IMHSS02 functionality. The NTDI01 termination unit does not support the additional features of the IMHSS03 module. Dipshunts on the termination unit configure the I/O signals. The IMHSS03 module has four analog inputs, nine analog outputs, three digital inputs and one digital output that terminate at the NTDI01 termination unit.

QUICK REFERENCE

Appendix E serves as a quick reference of NTDI01 I/O terminal assignments, dipshunt settings, circuit board layout and cable connections. Refer to the ***Digital Input Termination Unit (NTDI01)*** instruction for more information.

Figure E-1 shows the NTDI01 circuit board layout. Table E-1 lists dipshunt settings. Figure E-2 shows the terminal

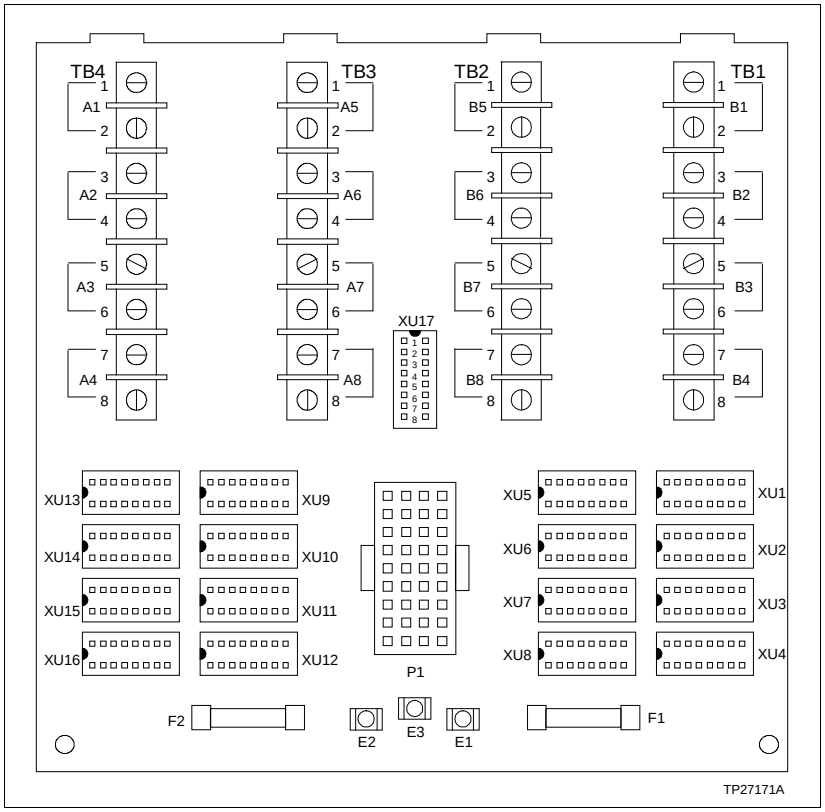

Figure E-1. NTDI01 Circuit Board Layout

assignment and I/O signal polarity. Figure E-3 shows the termination cable connection.

Table E-1. NTDI01 Dipshunt Settings

Application/Signal Type	Dipshunt	Dipshunt Pole							
		1	2	3	4	5	6	7	8
All applications and signal types	XU17	0	0	0	0	0	0	0	0
Analog inputs		0	0	0	1	1	0	0	0
LVDT secondary 1	XU2								
LVDT secondary 2	XU3								
Analog outputs		0	0	0	1	1	0	0	0
LVDT primary drive	XU1								
Simulation mode	XU4								
Servo 1 drive	XU13								
Servo 2 drive	XU14								
4-20 mA feedback output	XU16								
Digital inputs									
Lower input/raise input/trip bias contacts powered by:	XU5, XU9, XU11								
24 VDC external power source		0	0	0	1	1	0	0	0
24 VDC system power from E1		1	0	0	0	0	1	0	1
24 VDC system power from E2		0	1	0	0	0	1	0	1
Digital output									
Hard manual contacts powered by:	XU7								
24 VDC external power source		0	0	0	1	1	0	0	0
24 VDC system power from E1		1	0	0	0	0	1	0	1
24 VDC system power from E2		0	1	0	0	0	1	0	1
24 VDC	XU6, XU8	0	0	0	0	1	0	1	0
I/O common	XU10, XU12	0	0	0	0	1	0	0	1

NOTE: 0 = open or cut strap, 1 = intact or shorted strap.

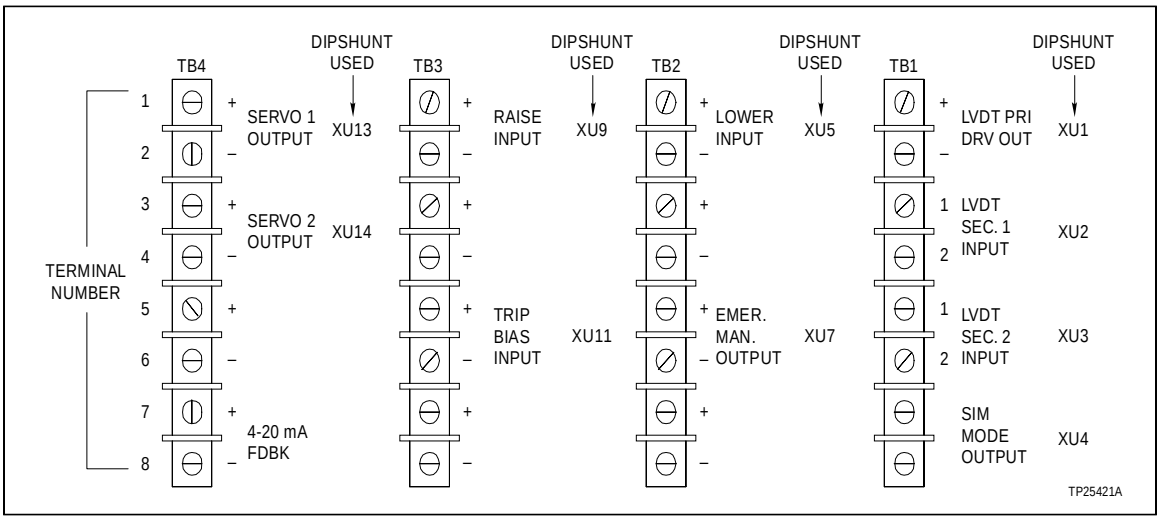

Figure E-2. NTDI01 I/O Terminal Block Assignments

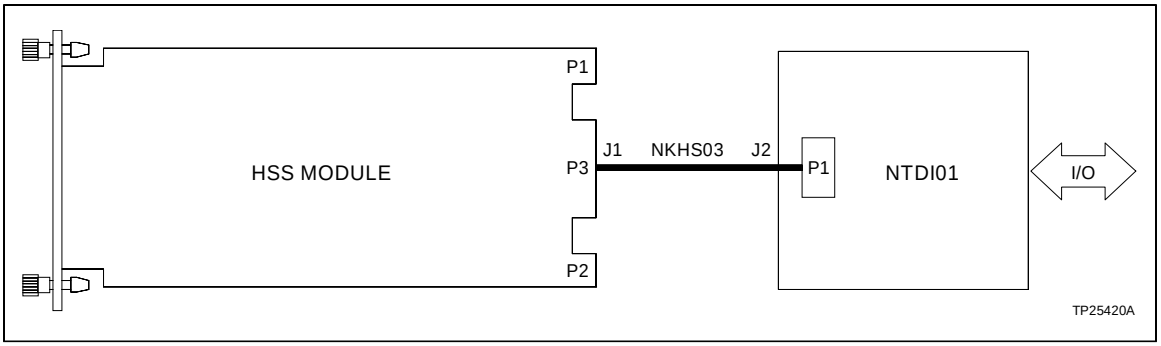

Figure E-3. NTDI01 Termination Cable Connection

Index

C

Calibration 4-1
  Function code 150 ..... B-1
  Function code 55 4-1
    Automatic 4-2
    Manual 4-5
  On-line B-5
Control loop 2-1
Controller gain
  Dipswitch 3-6
  Tuning 4-7, B-4
Controller tuning B-3

D

Demodulator gain
  Dipswitch 3-5
  Tuning 4-3, 4-5
Diagnostic dipswitches 6-2
Dipshunts
  I/O expander bus 6-8
  NTDI01 ..... E-1
  NTHS03 ..... C-1
Documentation 9-1

E

Exception reports 6-4

F

Function code 150
  Calibration B-1
  Configuration 3-11
  Problem reports 6-6
Function code 55
  Calibration 4-4
  Configuration 3-11
  Problem reports 6-4
  Tuning 4-2

G

Glossary 1-5

H

Hard manual mode 5-2

I

I/O expander bus address dipswitch 3-4
IMFCS01 application 1-1, 2-3
IMHSS03 ..... A-1
  Application 1-1, 2-1
  Calibration 4-1
  Circuit board layout 3-5
  Circuitry 2-5
  Diagnostics 6-2
  Dipswitches 3-4, A-1
  Jumpers 3-8, A-3
  LEDs 5-1, 6-1, A-4
  Operation 5-1
  Quick reference A-1
  Replacement 8-1
  Start-up 5-2
  Troubleshooting 6-6
Installation 3-1
  IMHSS03 3-10
  NIDI01 3-3
  NTDI01 3-4
  NTHS03 3-3
  Process hardware 3-2

L

LEDs 5-1, 6-1, A-4
LVDT
  Operation 2-2
  Oscillator frequency dipswitch 3-7

M

Multi-function processor operation 2-3

N

NIDI01 ..... D-1
  Cable connections D-2
  Circuit board layout D-1
  I/O terminal assignments D-2
  Jumpers D-1
Nomenclature 1-5
NTDI01 ..... E-1
  Cable connections E-3
  Circuit board layout E-1
  Dipshunts E-1
  I/O terminal assignments E-3

Index (continued)

NTHS03 ..... C-1
Cable connections C-3
Circuit board layout C-1
Dipshunts C-2
I/O terminal assignments C-2
Jumpers C-2
Null check 4-1

O

Ordering information 9-1

P

Preventive maintenance 7-1
Procedures 7-2
Schedule 7-1
Problem reports 6-4

R

Raise/lower contacts 5-2
Reference documents 1-4
Replacement procedures 8-1

S

Spare parts 8-1
Special handling 3-1
Specifications 1-6

T

Termination module replacement 8-2
Termination unit replacment 8-2
Training 9-1
Troubleshooting procedures 6-1
Tuning
Automatic 4-2
Controller gain 4-7, B-4
Demodulator gain 4-3, 4-5
Manual 4-5
Turbine trip 5-3

Visit Elsag Bailey on the World Wide Web at http://www.bailey.com

Our worldwide staff of professionals is ready to meet *your* needs for process automation.
For the location nearest you, please contact the appropriate regional office.

AMERICAS
29801 Euclid Avenue
Wickliffe, Ohio USA 44092
Telephone 1-216-585-8500
Telefax 1-216-585-8756

ASIA/PACIFIC
152 Beach Road
Gateway East #20-04
Singapore 189721
Telephone 65-391-0800
Telefax 65-292-9011

EUROPE, AFRICA, MIDDLE EAST
Via Puccini 2
16154 Genoa, Italy
Telephone 39-10-6582-943
Telefax 39-10-6582-941

GERMANY
Graefstrasse 97
D-60487 Frankfurt Main
Germany
Telephone 49-69-799-0
Telefax 49-69-799-2406

Form I-E96-322A Litho in U.S.A. 894

Copyright © 1994 by Elsag Bailey Process Automation, As An Unpublished Work
® Registered Trademark of Elsag Bailey Process Automation
™ Trademark of Elsag Bailey Process Automation