Company: Joyoung International Trading Co.,Limited
Atten： Smiling
Mobile/WhatsApp/Wechat:+86 18050035902
Email: info@htechplc.com
Website: https://www.joyoungintl.com/

Bailey® infi 90®

Instruction

Multi-Function Processor Termination Module
(NIMP01/02)

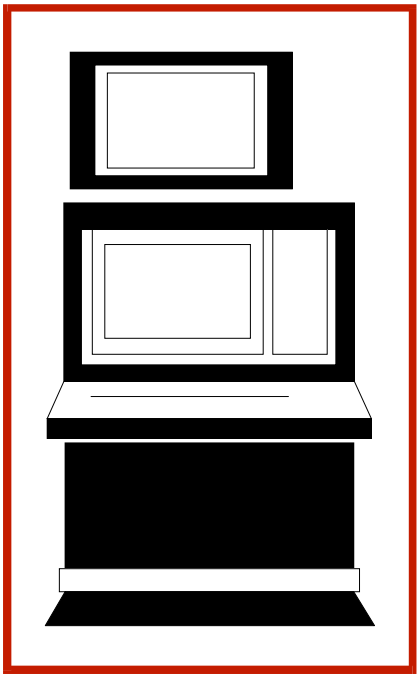

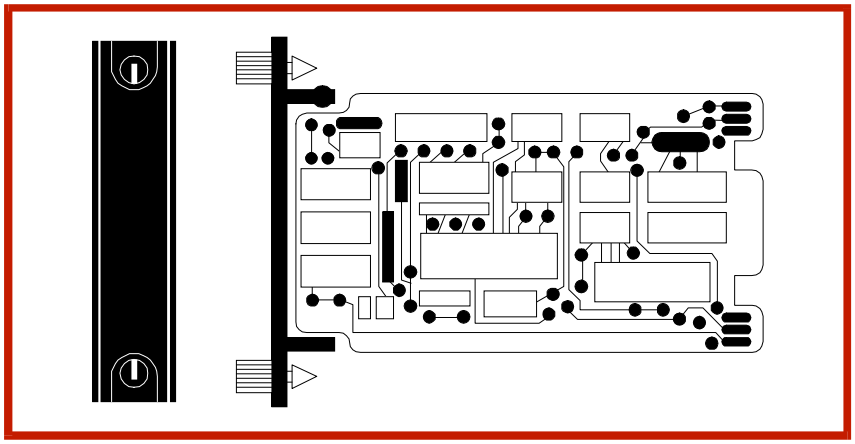

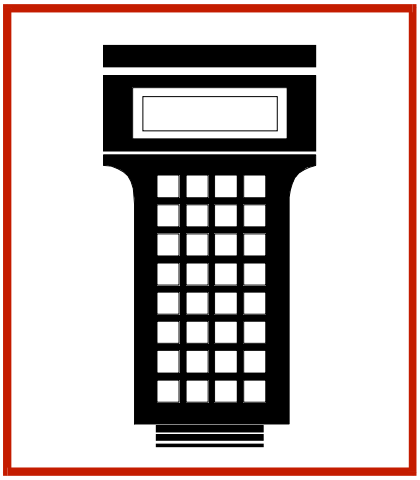

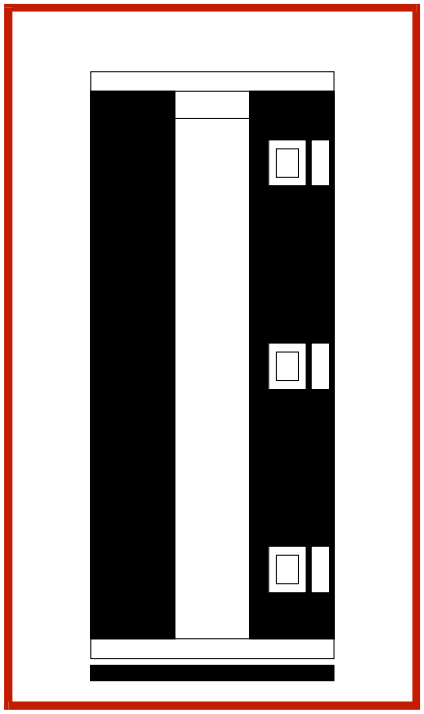

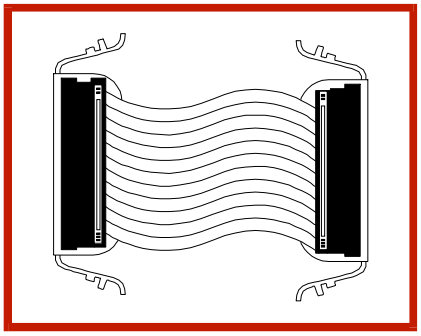

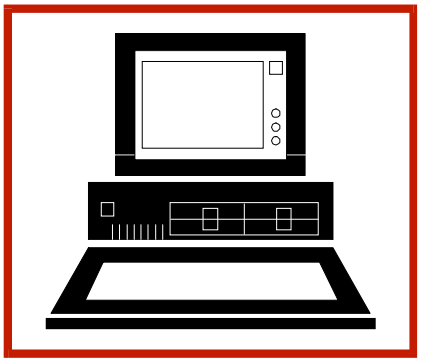

WARNING notices as used in this instruction apply to hazards or unsafe practices that could result in personal injury or death.

CAUTION notices apply to hazards or unsafe practices that could result in property damage.

NOTES highlight procedures and contain information that assists the operator in understanding the information contained in this instruction.

WARNING

INSTRUCTION MANUALS

DO NOT INSTALL, MAINTAIN, OR OPERATE THIS EQUIPMENT WITHOUT READING, UNDERSTANDING, AND FOLLOWING THE PROPER **Elsag Bailey** INSTRUCTIONS AND MANUALS; OTHERWISE, INJURY OR DAMAGE MAY RESULT.

RADIO FREQUENCY INTERFERENCE

MOST ELECTRONIC EQUIPMENT IS INFLUENCED BY RADIO FREQUENCY INTERFERENCE (RFI). CAUTION SHOULD BE EXERCISED WITH REGARD TO THE USE OF PORTABLE COMMUNICATIONS EQUIPMENT IN THE AREA AROUND SUCH EQUIPMENT. PRUDENT PRACTICE DICTATES THAT SIGNS SHOULD BE POSTED IN THE VICINITY OF THE EQUIPMENT CAUTIONING AGAINST THE USE OF PORTABLE COMMUNICATIONS EQUIPMENT.

POSSIBLE PROCESS UPSETS

MAINTENANCE MUST BE PERFORMED ONLY BY QUALIFIED PERSONNEL AND ONLY AFTER SECURING EQUIPMENT CONTROLLED BY THIS PRODUCT. ADJUSTING OR REMOVING THIS PRODUCT WHILE IT IS IN THE SYSTEM MAY UPSET THE PROCESS BEING CONTROLLED. SOME PROCESS UPSETS MAY CAUSE INJURY OR DAMAGE.

AVERTISSEMENT

MANUELS D'OPÉRATION

NE PAS METTRE EN PLACE, RÉPARER OU FAIRE FONCTIONNER L'ÉQUIPEMENT SANS AVOIR LU, COMPRIS ET SUIVI LES INSTRUCTIONS RÉGLEMENTAIRES DE **Elsag Bailey**. TOUTE NÉGLIGENCE À CET ÉGARD POURRAIT ÊTRE UNE CAUSE D'ACCIDENT OU DE DÉFAILLANCE DU MATÉRIEL.

PERTURBATIONS PAR FRÉQUENCE RADIO

LA PLUPART DES ÉQUIPEMENTS ÉLECTRONIQUES SONT SENSIBLES AUX PERTURBATIONS PAR FRÉQUENCE RADIO. DES PRÉCAUTIONS DEVRONT ÊTRE PRISES LORS DE L'UTILISATION DU MATÉRIEL DE COMMUNICATION PORTATIF. LA PRUDENCE EXIGE QUE LES PRÉCAUTIONS À PRENDRE DANS CE CAS SOIENT SIGNALÉES AUX ENDROITS VOULUS DANS VOTRE USINE.

PERTURBATIONS DU PROCÉDÉ

L'ENTRETIEN DOIT ÊTRE ASSURÉ PAR UNE PERSONNE QUALIFIÉE EN CONSIDÉRANT L'ASPECT SÉCURITAIRE DES ÉQUIPEMENTS CONTRÔLÉS PAR CE PRODUIT. L'AJUSTEMENT ET/OU L'EXTRACTION DE CE PRODUIT PEUT OCCASIONNER DES À-COUPS AU PROCÉDÉ CONTRÔLE LORSQU'IL EST INSÉRÉ DANS UNE SYSTÈME ACTIF. CES À-COUPS PEUVENT ÉGALEMENT OCCASIONNER DES BLESSURES OU DES DOMMAGES MATÉREILS.

NOTICE

The information contained in this document is subject to change without notice.

Elsag Bailey, its affiliates, employees, and agents, and the authors and contributors to this publication specifically disclaim all liabilities and warranties, express and implied (including warranties of merchantability and fitness for a particular purpose), for the accuracy, currency, completeness, and/or reliability of the information contained herein and/or for the fitness for any particular use and/or for the performance of any material and/or equipment selected in whole or part with the user of/or in reliance upon information contained herein. Selection of materials and/or equipment is at the sole risk of the user of this publication.

This document contains proprietary information of Elsag Bailey, Elsag Bailey Process Automation, and is issued in strict confidence. Its use, or reproduction for use, for the reverse engineering, development or manufacture of hardware or software described herein is prohibited. No part of this document may be photocopied or reproduced without the prior written consent of Elsag Bailey.

Preface

Termination modules provide a connection from the plant equipment to the INFI 90® process modules. The NIMP01 Multi-Function Processor Termination Module terminates a multi-function processor, INFI-NET® to computer transfer module, INFI-NET to INFI-NET transfer module or multi-function processor interface module. The NIMP01 Multi-Function Processor Termination Module provides a termination point for two RS-232-C lines or one RS-232-C line and one RS-485 line, plus a serial link to connect an analog control station or digital control station through an NICS01 Control I/O Termination Module.

The NIMP02 termination module is the interface for redundant multi-function processor modules. The NIMP02 termination module requires an NIMP01 termination module to operate. This product instruction explains how to install and use the NIMP01 and NIMP02 Multi-Function Processor Termination Modules.

® Registered trademarks of Elsag Bailey Process Automation.

List of Effective Pages

Total number of pages in this manual is 48, consisting of the following:

Page No.	Change Date
Preface	Original
List of Effective Pages	Original
iii through vii	Original
1-1 through 1-6	Original
2-1 through 2-12	Original
3-1 through 3-4	Original
4-1 through 4-2	Original
5-1	Original
A-1 through A-3	Original
B-1 through B-4	Original
C-1 through C-2	Original
D-1 through D-2	Original
E-1 through E-3	Original
Index-1 through Index-2	Original

When an update is received, insert the latest changed pages and dispose of the superseded pages.

NOTE: On an update page, the changed text or table is indicated by a vertical bar in the outer margin of the page adjacent to the changed area. A changed figure is indicated by a vertical bar in the outer margin next to the figure caption. The date the update was prepared will appear beside the page number.

Safety Summary

GENERAL WARNINGS	**Equipment Environment** All components, whether in transportation, operation or storage, must be in a noncorrosive environment. **Electrical Shock Hazard During Maintenance** Disconnect power or take precautions to insure that contact with energized parts is avoided when servicing.
SPECIFIC WARNINGS	Wear eye protection whenever working with cleaning solvents. When removing solvents from printed circuit boards using compressed air, injury to the eyes could result from splashing solvent as it is blown off the printed circuit board. (p. 3-1)
SPECIFIC CAUTIONS	Remove a module from its assigned slot before installing or removing a cable assigned to that slot. Failure to do so could result in damage to the module. (p. 2-7) It is strongly recommended that all power (cabinet, I/O, etc.) be turned off before doing any termination module wiring. Failure to do so could result in equipment damage. Do not apply power until all connections are verified. (p. 2-11, 4-1)

Sommaire de Sécurité

AVERTISSEMENTS D'ORDRE GÉNÉRAL	**Environnement de l'équipement** Ne pas soumettre les composants à une atmosphère corrosive lors du transport, de l'entreposage ou l'utilisation. **Possibilité de chocs électriques durant l'entretien** Débrancher l'alimentation ou prendre les précautions pour éviter tout contact avec des composants sous tension durant l'entretien.

AVERTISSEMENTS D'ORDRE SPÉCIFIQUE	Portez toujours des lunettes de protection lorsque vous utilisez des solvants de nettoyage. L'air comprimé servant à enlever le solvant des cartes de circuits imprimés provoque des éclaboussures qui risquent d'atteindre les yeux. (p. 3-1)

ATTENTIONS D'ORDRE SPÉCIFIQUE	Avant de retirer ou de brancher un câble, retirez le module logé dans la coulisse correspondante. Autrement, le module risque d'être endommagé. (p. 2-7) Il est fortement recommand, que toutes les alimentations (armoire, E/S, etc.) soient coupées avant d'effectuer quelque raccord que ce soit sur un carte de raccordement. Un manquement à ces instructions pourrait causer des dommage à l'équipement. Ne pas rebrancher les alimentations avant d'avoir vérifié tous les raccordements. (p. 2-11, 4-1)

Table of Contents

Page

SECTION 1 - INTRODUCTION 1-1
- OVERVIEW 1-1
- INTENDED USER 1-1
- MODULE DESCRIPTION 1-2
- FEATURES 1-2
- INSTRUCTION CONTENT 1-2
- HOW TO USE THIS MANUAL 1-3
- GLOSSARY OF TERMS AND ABBREVIATIONS 1-3
- REFERENCE DOCUMENTS 1-4
- NOMENCLATURE 1-4
- SPECIFICATIONS 1-5

SECTION 2 - INSTALLATION 2-1
- INTRODUCTION 2-1
- SPECIAL HANDLING 2-1
- UNPACKING AND INSPECTION 2-2
- SETUP/PHYSICAL INSTALLATION 2-2
  - Fuse Installation 2-3
  - Jumper Configuration 2-3
    - Jumpers J1 and J2 2-3
    - Jumpers J5 through J10, J19 and J20 2-3
    - Jumpers J11 and J12 2-4
    - Jumper J13 2-4
    - Jumpers J14 through J17 2-4
    - Jumper J18 2-4
  - Sequence of Event Recorders Jumper Settings 2-4
  - Cabling Connections 2-5
  - Cable Installation 2-5
    - NKTM01 Cable 2-5
    - NKTU02 and NKTU12 Cables 2-6
    - RS-232-C Communication Cable 2-7
    - Ribbon Cable 6634408A2 2-7
  - Installing the Termination Module 2-8
  - Terminal Wiring 2-8

SECTION 3 - MAINTENANCE 3-1
- INTRODUCTION 3-1
- PREVENTIVE MAINTENANCE SCHEDULE 3-1
- EQUIPMENT/TOOLS REQUIRED 3-2
- PREVENTIVE MAINTENANCE PROCEDURES 3-2
  - Printed Circuit Board Cleaning 3-2
    - General Cleaning and Washing 3-3
    - Edge Connector Cleaning 3-3
    - Cleaning Female Edge Connectors 3-4
  - Checking Connections 3-4

SECTION 4 - REPAIR/REPLACEMENT PROCEDURES 4-1
- INTRODUCTION 4-1
- FUSE REPLACEMENT 4-1
- MODULE REPLACEMENT PROCEDURES 4-1

SECTION 5 - SUPPORT SERVICES 5-1
- INTRODUCTION 5-1
- REPLACEMENT PARTS AND ORDERING INFORMATION 5-1
- TRAINING 5-1
- TECHNICAL DOCUMENTATION 5-1

Table of Contents (continued)

Page

APPENDIX A - IMMFP01 AND IMMFP02 MULTI-FUNCTION PROCESSOR A-1
INTRODUCTION A-1

APPENDIX B - IMMFP03 MULTI-FUNCTION PROCESSOR B-1
INTRODUCTION B-1

APPENDIX C - IMMPI01 AND IMMPI02 MULTI-FUNCTION PROCESSOR INTERFACE C-1
INTRODUCTION C-1

APPENDIX D - INIIT02 INFI-NET TO INFI-NETTRANSFER MODULE D-1
INTRODUCTION D-1

APPENDIX E - INICT03 INFI-NET TO COMPUTER TRANSFER MODULE E-1
INTRODUCTION E-1

List of Figures

No.	Title	Page
1-1.	Example Redundant IMP Termination Module Application	1-2
2-1.	IMP Termination Module Layout	2-3
2-2.	DCE Jumper Configuration	2-3
2-3.	DTE Jumper Configuration	2-3
2-4.	Nonhandshake Jumper Configuration	2-3
2-5.	Loopback Jumper Configuration	2-4
2-6.	Handshake Signal Schematic	2-4
2-7.	Jumper Settings for Rochester 3800	2-5
2-8.	Jumper Settings for Rochester ISM	2-5
2-9.	Jumper Settings for ESA Controls SER-740	2-5
2-10.	IMP Termination Module Cable Connections	2-6
A-1.	IMMFP01/02 Module Layout	A-1
B-1.	IMMFP03 Module Layout	B-1
C-1.	MPI Module Layout	C-1
C-2.	MPI J1 Jumper Setting	C-1
C-3.	MPI J2 Jumper Setting	C-1
D-1.	INIIT02 Module Layout	D-1
E-1.	INICT03 Module CPU Board Layout	E-1

List of Tables

No.	Title	Page
1-1.	Glossary of Terms and Abbreviations	1-3
1-2.	Reference Documents	1-4
1-3.	Nomenclature	1-4
1-4.	IMP Termination Module Specifications	1-5
2-1.	IMP Cable Applications, Connections and Length Requirements	2-6
3-1.	Preventive Maintenance Schedule	3-2
4-1.	Recommended Spare Parts List	4-2
A-1.	IMMFP01/02 Dipswitch SW3 Module Address Settings	A-1
A-2.	IMMFP01/02 Dipswitch SW4 Option Settings	A-1
A-3.	IMMFP01/02 Dipswitch SW4 Special Operation Settings	A-3
B-1.	IMMFP03 Dipswitch UUB0 Module Address Settings	B-1
B-2.	IMMFP03 Dipswitch UMB1 Options Settings	B-2
B-3.	IMMFP03 Dipswitch UMB1 Special Operation Settings	B-3
B-4.	IMMFP03 Dipswitch LMB2 Option Settings	B-3
B-5.	IMMFP03 Dipswitch LMB2SCSI Bus Address Settings	B-4
B-6.	IMMFP03 Dipswitch LLB3 Option Settings	B-4
B-7.	HW SETUP Socket Settings	B-4
B-8.	IMMFP03 Jumper Settings for J1, J2, J4 and J5	B-4
D-1.	INIIT02 Dipswitch SW4 Options Settings	D-1
D-2.	INIIT02 Dipswitch SW3 Settings	D-1
E-1.	INICT03 Dipswitch UUB0 Options Settings	E-1
E-2.	INICT03 Dipswitch UMB1 Baud Rate Settings	E-2
E-3.	INICT03 Dipswitch LMB2 Diagnostics Settings	E-2
E-4.	INICT03 Dipswitch LLB3 SCSI Port Settings	E-2
E-5.	INICT03 Jumpers J1, J2, J4 and J5 Settings	E-3

SECTION 1 - INTRODUCTION

OVERVIEW

There are two multi-function processor termination modules (IMP). The NIMP01 Multi-Function Processor Termination Module provides a connection to the serial interface for multi-function processors[1] (MFP). The NIMP01 termination module has two isolated RS-232-C ports. One port can be configured as a non-isolated RS-485 port. Multi-function processor modules use the ports to communicate with computers, printers and sequential events recorders. The NIMP01 termination module also provides the connection for a station serial communication link. This link allows the MFP module to communicate with an IISAC01 Analog Control Station or NDCS03 Digital Control Station. Figure 1-1 shows a typical IMP termination module application.

The NIMP01 termination module also interfaces with the INIIT02 INFI-NET to INFI-NET Transfer Module. The INFI-NET to INFI-NET transfer module (IIT) supports bidirectional communication through two RS-232-C ports. Port one passes system data only. Port two passes system data or can be used as a diagnostic port. The central IIT module can use a variety of means to link to the satellite IIT module such as modems, microwave and transceivers. This module communicates directly with a network interface I/O module on the local INFI-NET ring through the I/O expander bus.

The INFI-NET to computer transfer module[2] (ICT) provides the electronics needed to direct the operation of the INFI-NET to computer interface. It handles all communication with the host computer through the multi-function processor interface (MPI) or RS-232-C serial port. The MPI interface can act as DCE or DTE equipment.

The NIMP02 termination module is used in addition to the NIMP01 termination module when terminating redundant modules.

INTENDED USER

Anyone who installs, uses and maintains the NIMP01 and NIMP02 Multi-Function Processor Termination Modules should read and understand this manual before placing the termination module into service. Installation and troubleshooting require a technician or engineer with electrical experience and a working knowledge of the RS-232-C and RS-485 standards.

1. When using an IMMFP03 Multi-Function Processor Module, the IMP termination module interfaces with the auxiliary I/O card (IMMPI01 or IMMPI02 Multi-Function Processor Interface).
2. When using an INICT03 INFI-NET to Computer Transfer Module, the IMP termination module interfaces with the auxiliary I/O card (IMMPI01 or IMMPI02 Multi-Function Processor Interface).

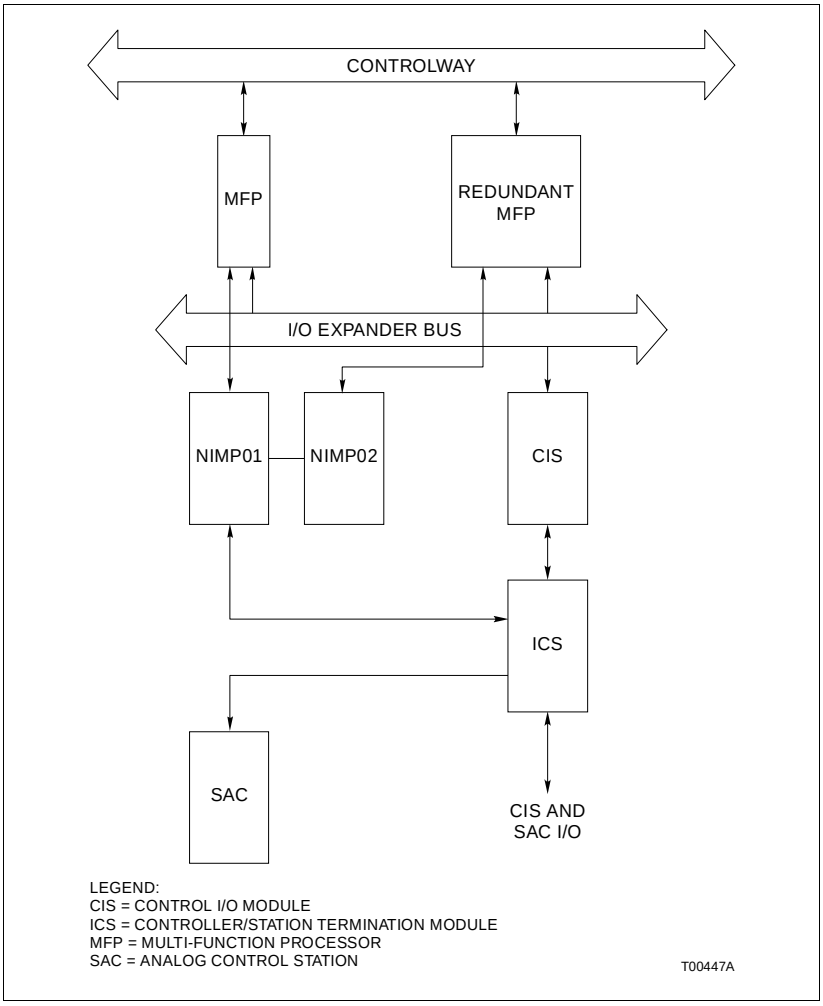

Figure 1-1. Example Redundant IMP Termination Module Application

MODULE DESCRIPTION

The NIMP01 termination module is a single printed circuit board that uses one slot in an NTMU01 or NTMU02 Termination Mounting Unit. The board contains:

- RS-232-C and RS-485 line drivers and receivers.
- Optical isolators.
- Connector sockets.
- DB-9 connectors.
- Light emitting diode (LED).
- Terminal blocks.
- Jumpers.
- Fuse.

The NIMP02 also occupies one slot in the TMU unit. It consists of:

- Two 16-pin connector sockets.
- One DB-9 connector for RS-485 link.
- Light emitting diode (LED).
- Terminal blocks.

FEATURES

The NIMP01 termination module has two jumper configurable RS-232-C ports for DCE or DTE operation, one of which can be configured as an RS-485 port. The ports allow the MFP module to talk to a variety of computers and communication equipment. An on-board LED lights when the MFP module connected to the IMP module is the primary module and is on-line. The termination module also provides two serial communication links for control stations through the NICS01 and NIDS01 termination modules. These links allow the MFP module to talk to analog and digital control stations. The NIMP02 module features a single LED that illuminates when the redundant MFP module is active.

INSTRUCTION CONTENT

This manual consists of five sections and five appendices.

Introduction Contains an overview of the features, specifications and a description of the IMP termination module.

Installation Describes precautions to observe when handling modules and setup procedures required before module operation. This section discusses dipswitch settings and installation procedures.

Maintenance Provides a maintenance schedule.

Repair/Replacement Procedures Details how to replace an IMP termination module.

Support Services Describes the support services (spare parts, training, documentation, etc.) available from Bailey Controls Company.

Appendices Briefly discuss the modules that use the IMP termination module and provide a cross reference of dipswitch and jumper settings for those modules.

HOW TO USE THIS MANUAL

Read this manual through in sequence. Read Section 2 thoroughly. Do the steps in order. Complete all steps in the section before using the IMP termination module. Refer to the Table of

Contents or Index to find specific information after the module is operating.

GLOSSARY OF TERMS AND ABBREVIATIONS

Table 1-1 lists definitions of the terms and abbreviations used in this instruction.

Table 1-1. Glossary of Terms and Abbreviations

Term	Definition
DCE	Data communication equipment or data circuit-terminating equipment. Equipment that establishes and terminates a communication link between two devices. In RS-232-C communication systems, the DCE nomenclature indicates the signals that appear at specified cable connection contacts. A modem is an example of this type of device.
Dipshunt	Dual in-line package with shorting straps.
DTE	Data terminal equipment. Equipment comprising the data source, data sink or both that provides the communication control function. In RS-232-C communication systems, the DTE nomenclature indicates the signals that appear at specified cable connection contacts. Terminals and printers are examples of this type of device.
ESD	Electrostatic sensitive devices. Electronic components subject to damage or failure when exposed to an electrostatic charge; require special handling.
Handshaking	Procedures and protocol used by two devices to establish and maintain communication.
MFT	Machine fault timer. Reset by the processor during normal operation. If not reset regularly, the MFT times out and the module stops.
MMU	Module mounting unit. A card cage that provides electrical and communication support for INFI 90/Network 90® modules.
RS-232-C and RS-485	Two serial communication interface standards developed by the Electronics Industry Association (EIA) specifying what signals and voltages will be used to transmit data from a computer (DTE) to a modem (DCE).
SCSI	Small computer system interface. An I/O bus standard by the American National Standard Institute (ANSI) that defines the protocol and peripheral interconnection formats of a high speed parallel bus for use throughout the computer industry.
SRAM	Static random access memory. Contents are lost when power is removed.
TM	Termination module. Provides input/output connection between plant equipment and the INFI 90/Network 90 modules.
TMU	Termination mounting unit. A card cage that provides housing for INFI 90/Network 90 termination modules.

® Network 90 is a registered trademark of Elsag Bailey Process Automation.

REFERENCE DOCUMENTS

Table 1-2 lists the documents referenced in this instruction.

Table 1-2. Reference Documents

Document No.	Title
I-E93-902	Digital Control Station (NDCS03)
I-E96-117	Analog Control Station (IISAC01)
I-E96-201	Multi-Function Processor Module (IMMFP01)
I-E96-202	Multi-Function Processor Module (IMMFP02)
I-E96-203	Multi-Function Processor Module (IMMFP03)
I-E96-409	Controller/Station Termination Module (NICS01)
I-E96-500	Site Planning and Preparation
I-E96-601	INFI-NET Communications Modules

NOMENCLATURE

Table 1-3 is a list of related hardware.

Table 1-3. Nomenclature

Nomenclature	Description
IISAC01	Analog control station
IMMFP01/02/03	Multi-function processor module
IMMPC01	Multi-processing controller module
IMMPI01/02	Multi-function processor interface
INICT03	INFI-NET to computer transfer module
INIIT02	INFI-NET to INFI-NET transfer module
NDCS03	Digital control station
NICS01	Control/station termination module
NIDS01	Digital station termination module
NKSE01	Station serial extension cable (PVC)
NKSE11	Station serial extension cable (non-PVC)
NKTM01	Termination module cable
NKTU02	Termination module cable (PVC)
NKTU12	Termination module cable (non-PVC)
NTMU01	Termination mounting unit (rear mount)
NTMU02	Termination mounting unit (front mount)

SPECIFICATIONS

Refer to Table 1-4 for the specifications of the NIMP01 and NIMP02 termination modules.

Table 1-4. IMP Termination Module Specifications

Property	Characteristic/Value
Power Requirements	+24 VDC, 210 mA maximum current consumption
Communication	Two RS-232-C serial ports, or one RS-232-C port and one RS-485 port.
	1 control station serial link
Cable Insulation Specifications:	
PVC (UL Rating CL2)	80°C (176°F) at 300 V
Non-PVC (UL Rating PLTC)	90°C (194°F) at 300 V
Mounting	Screw mounts on the field termination panel.
Environmental:	
Electromagnetic/Radio Frequency Interference	Values are not available at this time. Keep cabinet doors closed. Do not use communication equipment any closer than 2 meters from the cabinet.
Operating Temperature	0° - 70°C (32° - 158°F)
Relative Humidity	5% - 90% (±5%) up to 70°C (158°F) (noncondensing)
Altitude	Sea level to 3 km (1.86 mi)
Air Quality	Bailey equipment should be operated and stored in a noncorrosive environment.
Cooling Requirements	No cooling necessary when used in Bailey cabinets and operated within environmental limits.
Certification	All termination units are CSA certified as process control equipment for use in an ordinary (nonhazardous) location.

SPECIFICATIONS SUBJECT TO CHANGE WITHOUT NOTICE

SECTION 2 - INSTALLATION

INTRODUCTION

This section lists the steps to properly install the NIMP01 and NIMP02 Multi-Function Processor Termination Modules (IMP). The installation procedure includes physical installation, dip-shunt configuration, cable connection, power wiring and handling. To properly install the IMP termination modules, do the steps in this section in the order they appear.

SPECIAL HANDLING

Observe these steps when handling electronic circuitry:

NOTE: Always use Bailey's field static kit (part number 1948385A1 - consisting of two wrist straps, ground cord assembly, alligator clip and static dissipative work surface) when working with the modules. The kit grounds a technician and the static dissipative work surface to the same ground point to prevent damage to the modules by electrostatic discharge.

1. ***Use Static Shielding Bag.*** Keep the modules in the static shielding bag until you are ready to install them in the system. Save the bag for future use.

2. ***Ground Bag Before Opening.*** Before opening a bag containing an assembly with semiconductors, touch it to the equipment housing or a ground to equalize charges.

3. ***Avoid Touching Circuitry.*** Handle assemblies by the edges; avoid touching the circuitry.

4. ***Avoid Partial Connection of Semiconductors.*** Verify that all devices connected to the modules are properly grounded before using them.

5. Ground Test Equipment.

6. ***Use an Antistatic Field Service Vacuum.*** Remove dust from the module if necessary.

7. ***Use a Grounded Wrist Strap.*** Connect the wrist strap to the appropriate grounding plug on the power entry panel. The grounding plug on the power entry panel is connected to the earth grounding electrode system through the AC safety ground.

8. ***Do Not Use Lead Pencils to Set Dipswitches.*** To avoid contamination of dipswitch contacts that can result in unnecessary circuit board malfunction, do not use a lead pencil to set a dipswitch.

UNPACKING AND INSPECTION

1. Examine the hardware immediately for shipping damage.

2. Notify the nearest Bailey Controls Company sales office of any such damage.

3. File a claim for any damage with the transportation company that handled the shipment.

4. Use the original packing material and container to store the hardware.

5. Store the hardware in an environment of good air quality, free from temperature and moisture extremes.

SETUP/PHYSICAL INSTALLATION

This section explains how to configure and install the termination modules. You must set the jumpers before installing the termination modules. The pin jumpers on the NIMP01 termination module determine the operation of the RS-232-C ports. Each port can be configured as a DTE, DCE, nonhandshake or loopback device. Only port one can terminate to a diagnostic terminal. The termination module can interface with:

- Devices:
  Printer.
  Sequence of events recorder.
  IBM® PC.
  COMPAQ® and compatible computers.

- Terminals:
  VT1XX.
  ADM3.
  VISUAL 50.
  WYSE (WY50).
  TELEVIDEO.
  FALCO.

- VAXstation™.

Fuse Installation

Fuse F1, a 1.0 amp/250 volt fuse (Bailey part number 194776A11001) is installed in each IMP termination module. Figure 2-1 shows the termination module layout. Verify that the fuse is installed in fuse holder F1.

® IBM is a registered trademark of International Business Machines Corporation.
® COMPAQ is a registered trademark of COMPAQ Corporation.
™ VAXstation is a trademark of Digital Equipment Corporation.

Jumper Configuration

Figure 2-1 shows the jumper locations. There are 18 configurable jumpers.

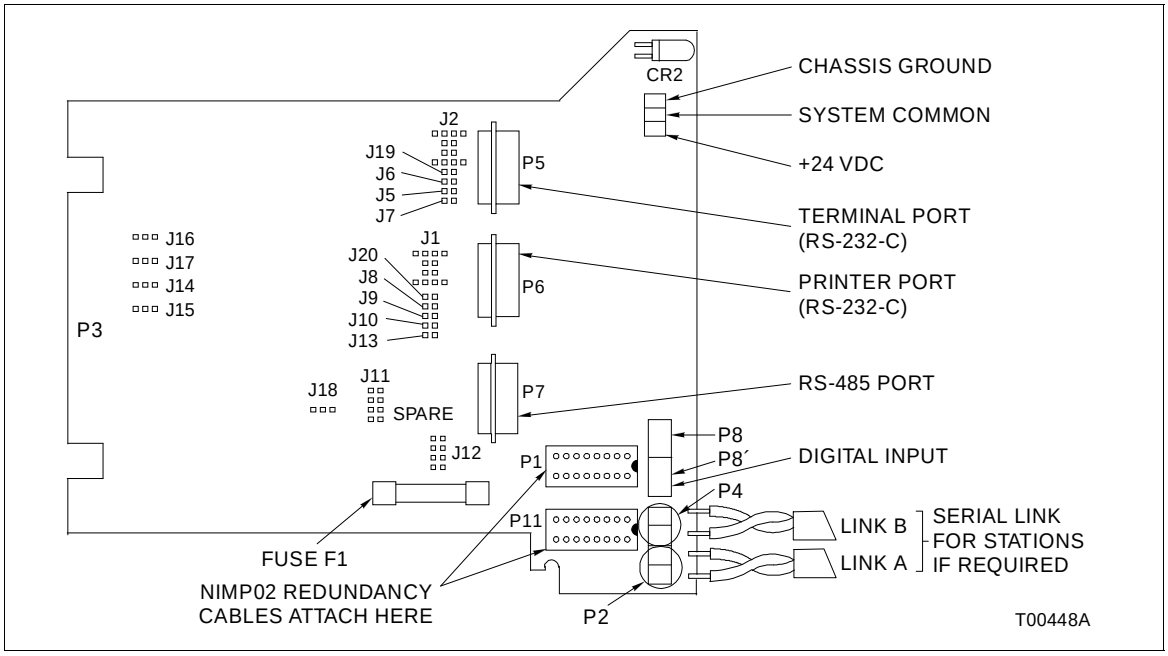

Figure 2-1. IMP Termination Module Layout

JUMPERS J1 AND J2

Figures 2-2, 2-3, 2-4, and 2-5 show the internal circuitry of jumpers J1 and J2. These jumpers must be set to match the equipment communicating with the primary module. Jumper J2 controls the P5 connector, J1 the P6 connector. Connectors P5 and P6 represent the DB-9 connectors.

Determine if the equipment requires a DCE, DTE, nonhandshake or loopback jumper setting configuration. Figures 2-2 through 2-5 show how to set jumpers J1 and J2 for the different configurations.

JUMPERS J5 THROUGH J10, J19 AND J20

Jumpers J5 through J10, J19 and J20 enable the handshake functions for the communication link and must be set to match the equipment being used. See Figure 2-6 for a schematic of the jumpers. Normally, these jumpers are installed to the +12 VDC supply corresponding to logic zero. Jumper posts labeled J11 and J12 are provided to store the jumpers when not used for J5 through J10, J19 and J20.

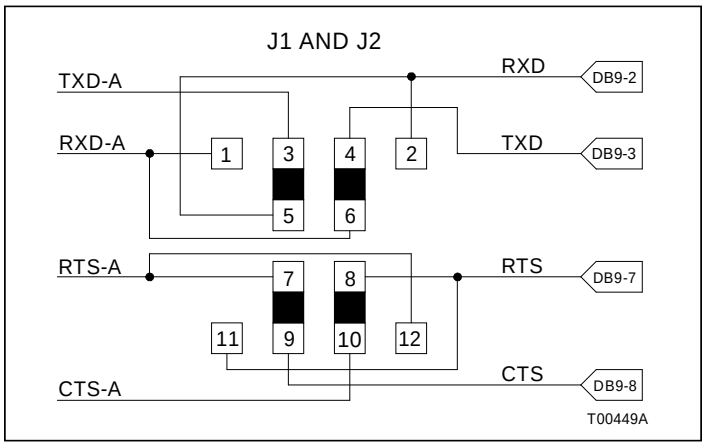

Figure 2-2. DCE Jumper Configuration

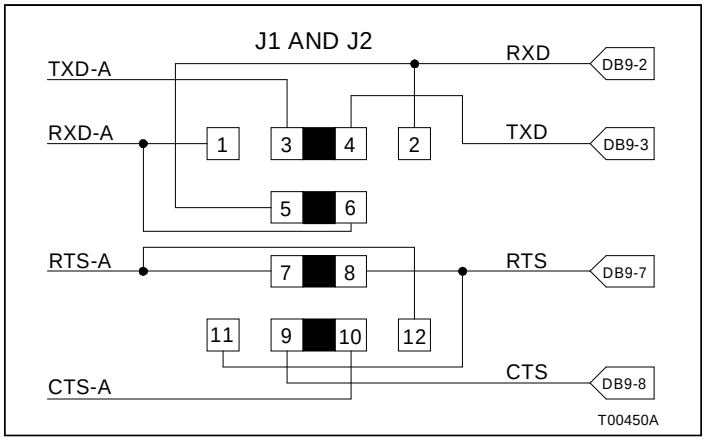

Figure 2-3. DTE Jumper Configuration

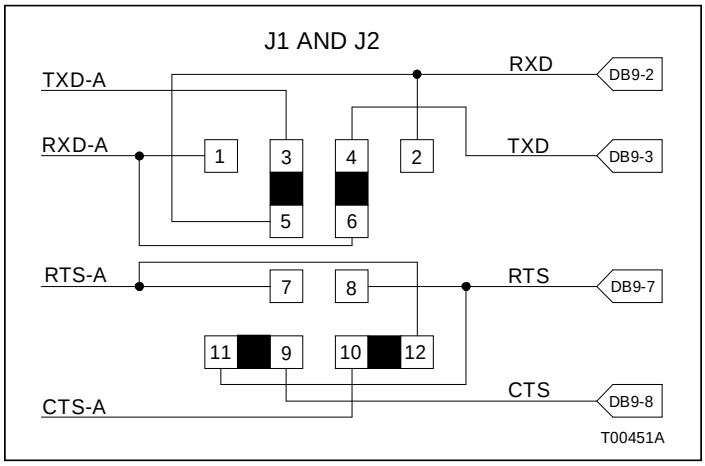

Figure 2-4. Nonhandshake Jumper Configuration

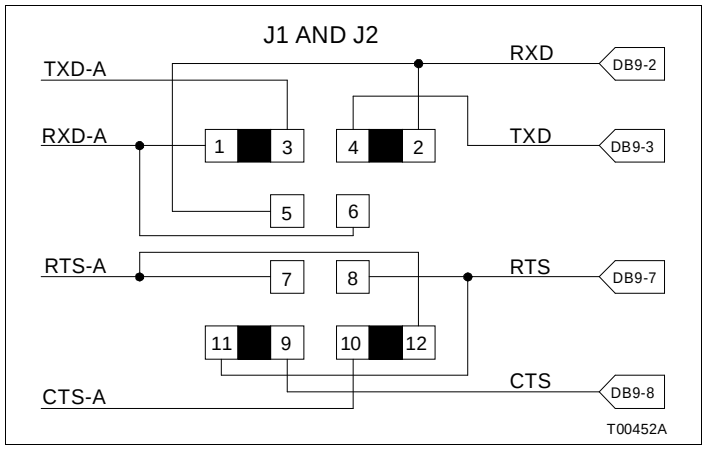

Figure 2-5. Loopback Jumper Configuration

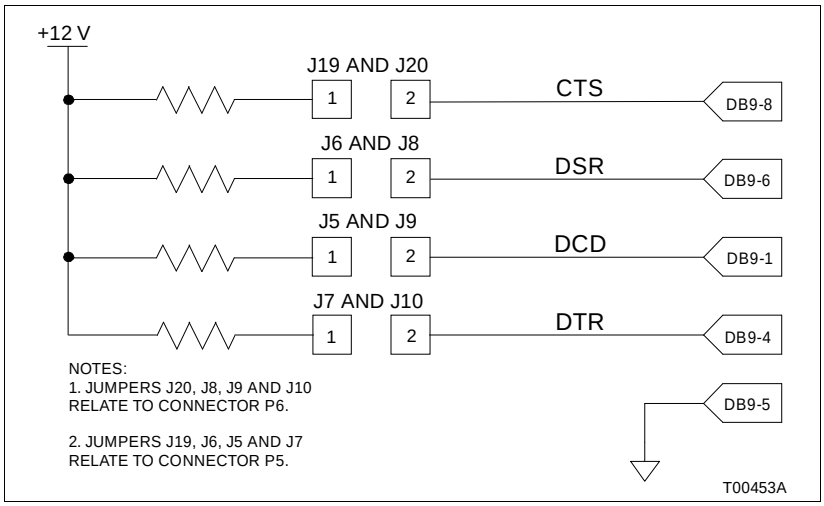

Figure 2-6. Handshake Signal Schematic

JUMPERS J11 AND J12

Jumpers J11 and J12 are storage posts for extra jumpers.

JUMPER J13

Jumper J13 with pins one and two jumpered connects RS-485 cable shielding (P7, pin one) to chassis ground.

JUMPERS J14 THROUGH J17

Jumpers J14 through J17 allow proper routing of the signals on the termination module circuit board. These alternate signals are not related to data communications and are reserved for future use. For proper RS-232-C and RS-485 operation, these must be left in the pins one and two jumpered configuration.

JUMPER J18

To configure the terminal serial port for RS-485 operation, complete Steps 1 and 2.

1. Jumper pins 1 and 2 of J18.

2. Use P7 as the serial port instead of P5.

NOTE: Port P5 is inactive in this mode. Port P7 has a fixed pin arrangement and is not altered by any P5 jumpers. This communication link is not optically isolated. Port P6 remains an RS-232-C port.

Sequence of Event Recorders Jumper Settings

Figures 2-7, 2-8, and 2-9 shows jumpers J1, J2, J8, J9 and J10 configuration sequence of event recorders.

Cabling Connections

Figure 2-10 shows the cable connections from the IMP termination modules to the control modules. Table 2-1 lists the termination module cable applications.

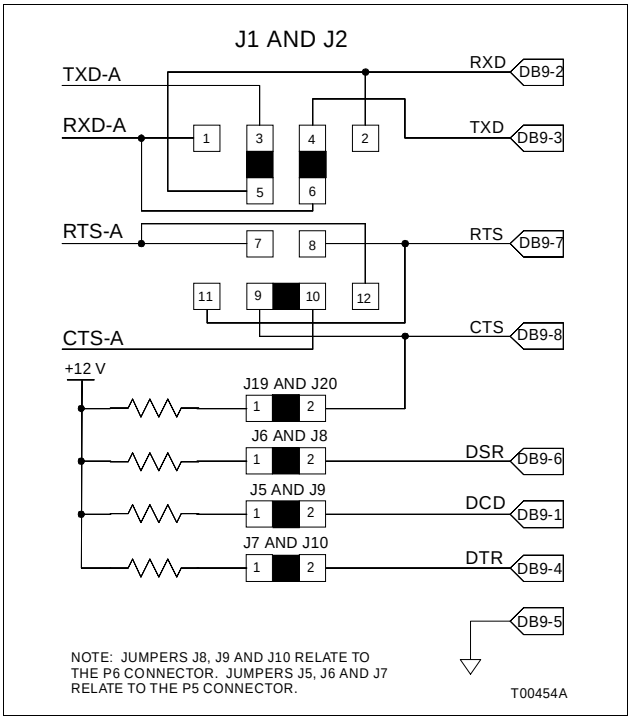

Figure 2-7. Jumper Settings for Rochester 3800

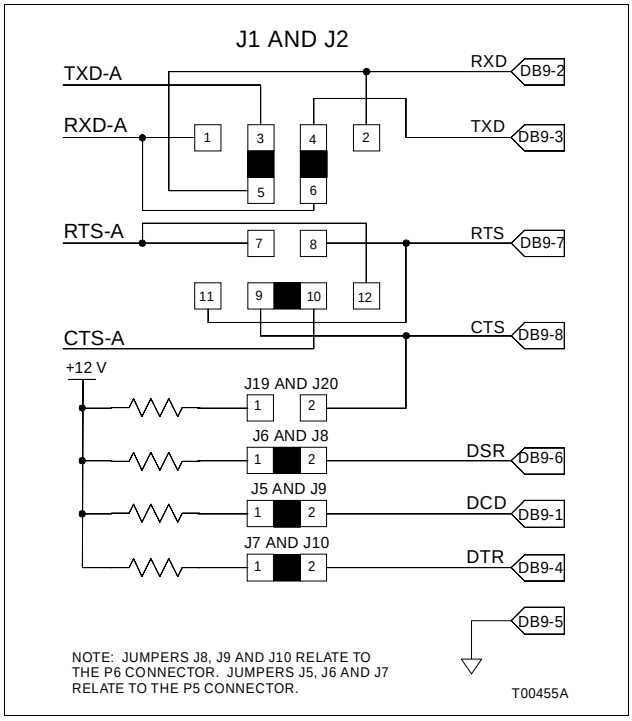

Figure 2-8. Jumper Settings for Rochester ISM

Cable Installation

Figure 2-10 shows the cable connections between the modules, termination modules and output devices. The cable from the IMP termination module to the control module can be either the KTU termination module cable (round cable) or the KTM termination module cable (ribbon cable).

CAUTION	**Remove a module from its assigned slot before installing or removing a cable assigned to that slot. Failure to do so could result in damage to the module.**
ATTENTION	**Avant de retirer ou de brancher un câble, retirez le module logé dans la coulisse correspondante. Autrement, le module risque d'être endommagé.**

NKTM01 CABLE

This cable connects the NIMP01 termination module to the primary module and the NIMP02 termination module to the redundant module. The NKTM01 Termination Module Cable (KTM) is a flat ribbon cable (30 meters [100 feet] maximum).

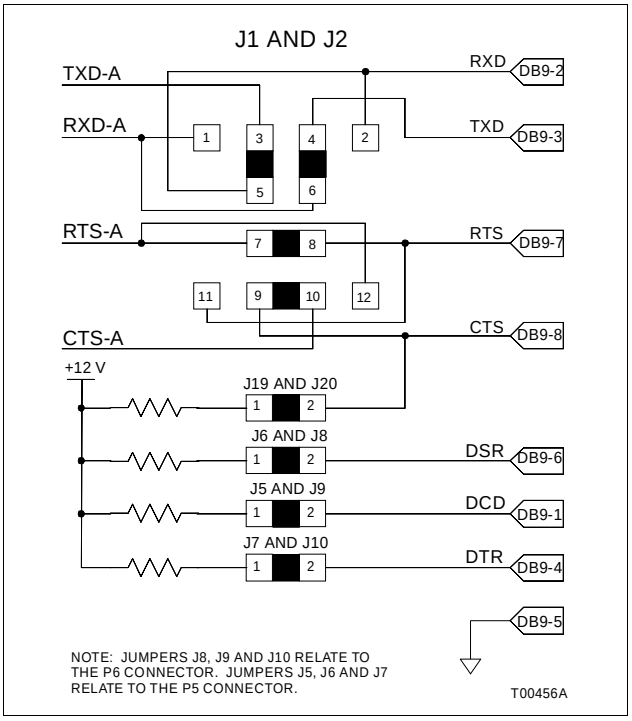

Figure 2-9. Jumper Settings for ESA Controls SER-740

Do not bundle the ribbon cable with other wiring. Bundling the cable can cause cross talk in the ribbon cable. To install the cable:

NOTE: If the module is installed, pull it several inches from the backplane ***before*** installing the cable.

1. Insert one end of the cable into the module mounting unit backplane slot assigned to the module. The cable should latch securely in place. Card edge connector P3 of the module connects to this end of the cable.

2. Insert the other end of the cable into the termination mounting unit (TMU) backplane slot assigned to the IMP termination module. The cable should latch securely in place. Card edge connector P3 of the termination module connects to this end of the cable.

NKTU02 AND NKTU12 CABLES

The NKTU02 PVC Termination Cable (KTU) and the NKTU12 Non-PVC Termination Cable (KTU) connect the NIMP01 termination module to the primary module and the NIMP02 termination module to the redundant module. The KTU cable is a

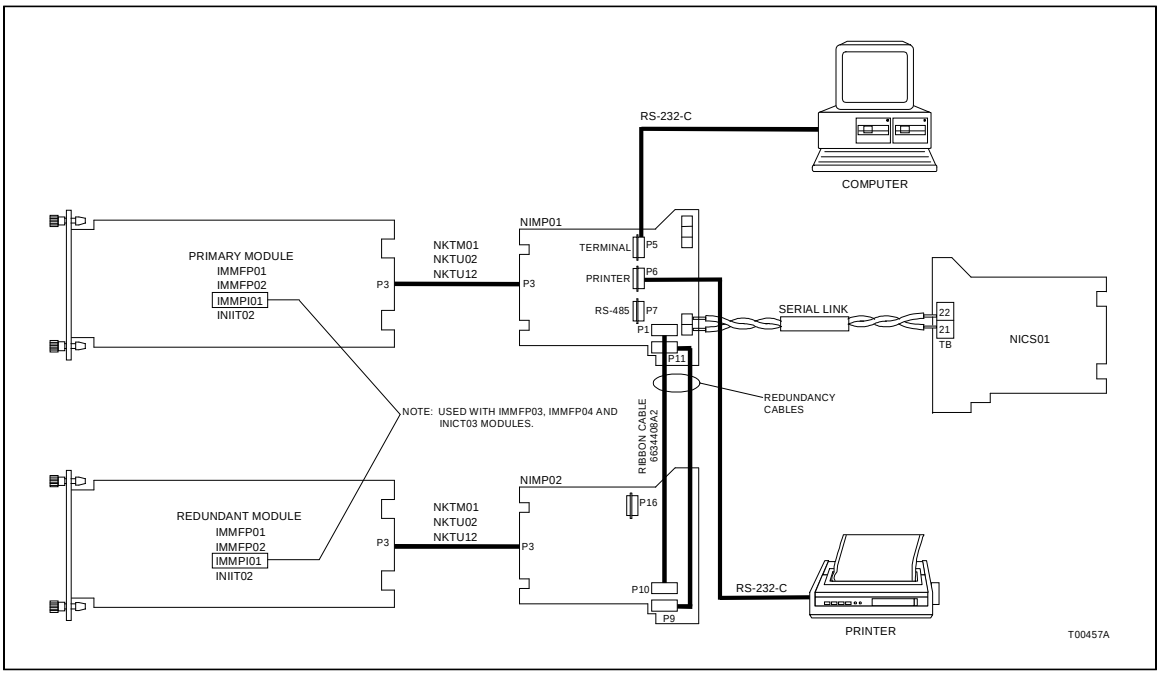

Figure 2-10. IMP Termination Module Cable Connections

round cable (61 meters [200 feet] maximum). The cable is shielded. To install the cable:

> **NOTE:** If the module is installed, pull it several inches from the backplane ***before*** installing the cable.

1. Insert one end of the cable into the module mounting unit backplane slot assigned to the module. The cable should latch securely in place. Card edge connector P3 of the module connects to this end of the cable.

2. Connect the shield wire to the shield bus bar.

3. Insert the other end of the cable into the termination mounting unit (TMU) backplane slot assigned to the IMP termination module. The cable should latch securely in place. Card edge connector P3 of the termination module connects to this end of the cable.

4. Install a cable retaining bracket to the rear of the TMU unit.

Table 2-1. IMP Cable Applications, Connections and Length Requirements

Cable	Connections				Maximum Length Meters (Feet)
	From		To		
	Device	Connector	Device	Connector	
HCBL01	DCE or DTE device	DB-25	NIMP01	P2 or P3	15 (50)[1]
NKTM01	NIMP01	P1	Primary module	P3	30 (100)
	NIMP02		Redundant module		
NKTU02 or NKTU12	NIMP01	P1	Primary module	P3	61 (200)
	NIMP02		Redundant module		
6634408A2	NIMP01	P1	NIMP02	P10	30 (100)
	NIMP01	P11	NIMP02	P9	

NOTE:
1.The specified maximum length only applies to the HCBL01 cable. The performance of INFI 90 modules does not place a restriction on the maximum length of the RS-232-C cable. Follow industry-wide accepted RS-232-C practices and rules when selecting a suitable RS-232-C cable for your system.

RS-232-C COMMUNICATION CABLE

The RS-232-C communication cable connects the IMP module to a computer, terminal, printer or modem (Figure 2-10). Table 2-1 lists the requirements of the RS-232-C cable, its application, connector assignments and length restrictions. To install the RS-232-C cable:

1. Turn off power to the host computer or terminal.

2. Install the RS-232-C cable to the DB-9 connector on the IMP module marked P5 for port 1. Connect the other end of the RS-232-C cable to the external device.

3. Install the RS-232-C cable to the DB-9 connector on the IMP module marked P6 for port 2. Connect the other end of the RS-232-C cable to the external device.

RIBBON CABLE 6634408A2

This cable connects the NIMP01 and NIMP02 termination modules for redundant module configuration. To install the cable:

1. Insert one end of the cable into the P1 connector of the NIMP01 termination module.

2. Insert the other end of the cable into the P10 connector of the NIMP02 termination module.

3. Insert one end of the cable into the P11 connector of the NIMP01 termination module.

4. Insert the other end of the cable into the P9 connector of the NIMP02 termination module.

Installing the Termination Module

The IMP termination module inserts into a standard INFI 90 termination mounting unit (TMU) and occupies one slot. To install:

1. Verify the slot assignment of the termination module.

2. Align the termination module with the guide rails in the termination mounting unit and partially insert the module.

3. Push down the plastic stop and insert the module until it is latched into the TMU unit.

4. Install the front cover.

Terminal Wiring

CAUTION	**It is strongly recommended that all power (cabinet, I/O, etc.) be turned off before doing any termination module wiring. Failure to do so could result in equipment damage. Do not apply power until all connections are verified.**
ATTENTION	**Il est fortement recommand, que toutes les alimentations (armoire, E/S, etc.) soient coupées avant d'effectuer quelque raccord que ce soit sur un carte de raccordement. Un manquement à ces instructions pourrait causer des dommage à l'équipement. Ne pas rebrancher les alimentations avant d'avoir vérifié tous les raccordements.**

Serial link and power wiring must be connected to the NIMP01 terminal strip. The NIMP02 module only has power wiring terminals. To connect serial link and power wiring:

NOTE: Proper polarity of all signals must be maintained.

1. Remove the front cover.

2. Insure the IMP termination module is pulled out far enough to gain access to the terminal strip.

3. Feed the serial link wiring into the terminal strip area and connect them to the appropriate terminals.

4. Connect an 18 AWG wire from the +24 VDC bus of the termination mounting unit to the +24 VDC terminal of the termination module.

5. Connect an 18 AWG wire from the common bus of the termination mounting unit to the common terminal of the termination module.

6. Connect an 18 AWG wire from the chassis ground terminal of the termination module to the cabinet chassis ground bolt.

7. Insert the module until it locks securely into place.

8. Replace (snap on) the front cover.

The termination module is ready for operation if:

1. The fuses are installed.

2. The cable is installed and verified.

3. All field wiring is complete.

4. Power is connected and applied to the termination module.

SECTION 3 - MAINTENANCE

INTRODUCTION

WARNING	**Wear eye protection whenever working with cleaning solvents. When removing solvents from printed circuit boards using compressed air, injury to the eyes could result from splashing solvent as it is blown off the printed circuit board.**
AVERTISSEMENT	**Portez toujours des lunettes de protection lorsque vous utilisez des solvants de nettoyage. L'air comprimé servant à enlever le solvant des cartes de circuits imprimés provoque des éclaboussures qui risquent d'atteindre les yeux.**

The reliability of any stand-alone product or control system is affected by the maintenance of the equipment. Bailey Controls Company strongly recommends that all equipment users practice a preventive maintenance program that will keep the equipment operating at an optimum level.

This section presents procedures that the customer should be able to perform on-site. These preventive maintenance procedures should be used as a guideline to assist you in establishing good preventive maintenance practices. Select the minimum steps required to meet the cleaning needs of your system.

Personnel performing preventive maintenance should meet the following qualifications.

- Should be qualified electrical technicians or engineers that know the proper use of test equipment.
- Should be familiar with the NIMP01 Multi-Function Processor Termination Module (IMP), have experience working with process control systems, and know what precautions to take when working on live AC systems.

PREVENTIVE MAINTENANCE SCHEDULE

Table 3-1 is the preventive maintenance schedule for the IMP termination module. The table lists the preventive maintenance tasks in groups according to their specified maintenance interval. Some tasks in Table 3-1 are self explanatory. Instructions for tasks that require further explanation are covered under ***PREVENTIVE MAINTENANCE PROCEDURES*** in this section.

NOTE: The preventive maintenance schedule is for general purposes only. Your application may require special attention.

Table 3-1. Preventive Maintenance Schedule

Task	Frequency
Check the cabinet air filters. Clean or replace them as necessary. Check the air filter more frequently in excessively dirty environments.	3 months
Check cabinet and termination module for dust. Clean as necessary using an antistatic vacuum.	
Check all signal, power and ground connections within the cabinet and verify that they are secure. See procedure.	
Check circuit board and cable connections, giving particular attention to power contacts. Clean as necessary. See procedure.	12 months
Complete all tasks in this table.	Shutdown

The following item should not be serviced on the IMP termination module. Do not attempt to replace discrete components on the termination module.

EQUIPMENT/TOOLS REQUIRED

Following are the tools and equipment required for maintenance procedures.

- Antistatic vacuum.
- Clean, lint free cloth.
- Compressed air.
- Eberhard Faber (400A) pink pearl eraser or equivalent.
- Fiberglass or nylon burnishing brush.
- Foam tipped swab.
- Bladed screwdriver suitable for terminal blocks.
- Isopropyl alcohol (99.5% electronic grade).
- Natural bristle brush.

PREVENTIVE MAINTENANCE PROCEDURES

This section covers tasks from Table 3-1 that require specific instruction or further explanation. The tasks and instructions covered are:

- Printed circuit board cleaning.
- How to check signal, power and ground connections.

Printed Circuit Board Cleaning

There are several circuit board cleaning procedures in this section. These procedures cover circuit board cleaning, cleaning edge connectors and circuit board edge connector contacts. Use the procedures that meet the needs of each circuit board. Remove all dust, dirt, oil, corrosion or any other contaminant from the circuit board.

Do all cleaning and handling of the printed circuit boards at static safe work stations. Always observe the steps under ***SPECIAL HANDLING*** in Section 2 when handling printed circuit boards.

GENERAL CLEANING AND WASHING

If the printed circuit board needs minor cleaning, remove dust and residue from the printed circuit board surface using clean, dry, filtered compressed air or an antistatic field service vacuum cleaner.

Another method of washing the printed circuit board is:

1. Clean the printed circuit board by spraying or wiping the board with a foam tipped swab wetted in isopropyl alcohol (99.5% electronic grade).

2. When the circuit board is clean, remove excess solvent by using compressed air to blow it free of the circuit board.

EDGE CONNECTOR CLEANING

To clean edge connector contacts:

1. Use a solvent mixture of 80% isopropyl alcohol (99.5% electronic grade) and 20% distilled water.

2. Soak a lint free cloth with the solvent mixture.

3. Work the cloth back and forth parallel to the edge connector contacts.

4. Repeat with a clean cloth that is soaked with the solvent mixture.

5. Dry the edge connector contact area by wiping with a clean lint free cloth.

To clean tarnished or deeply stained edge connector contacts:

1. Use an Eberhard Faber (400A) pink pearl eraser, or equivalent, to remove tarnish or stains. Fiberglass or nylon burnishing brushes may also be used.

2. Minimize ESD by using the 80/20 isopropyl alcohol/water solution during burnishing.

3. Do not use excessive force while burnishing. Use only enough force to shine the contact surface. Inspect the edge connector after cleaning to assure no loss of contact surface.

CLEANING FEMALE EDGE CONNECTORS

To clean the contacts on a female edge connector:

1. Use a foam tipped swab or a lint free cloth wrapped over a piece of scrap circuit board. Soak the swab or cloth in electronic grade isopropyl alcohol.

2. Insert the swab of cloth covered circuit board into edge connector and work it back and forth to clean the contacts.

3. Rinse the edge connector contacts by spraying with isopropyl alcohol.

4. Remove excess alcohol and dry using compressed air.

Checking Connections

Check all signal wiring, power and ground connections within the cabinet to verify their integrity. When checking connections, always turn a screw, nut or other fastening device in the direction to tighten only. If the connection is loose, it will be tightened. If the connection is tight, the tightening action will verify that it is secure. There must not be any motion done to loosen the connection.

> **NOTE:** Bailey recommends this preventive maintenance task be performed during power supply preventive maintenance, while the power to the cabinet is off.

1. Check and verify that all field wiring connections are secure.

2. Check all cable connections.

SECTION 4 - REPAIR/REPLACEMENT PROCEDURES

INTRODUCTION

This section explains the replacement procedures for the NIMP01 and NIMP02 Multi-Function Processor Termination Modules (IMP).

FUSE REPLACEMENT

If the fuse (F1) opens, replace it with a fuse having an equivalent rating. Table 4-1 describes the fuse and lists its Bailey part number. To replace a fuse:

1. Turn off power to the cabinet.
2. Remove the blown fuse from its holder (F1).
3. Replace the blown fuse with a 1.0 A/250 VDC fuse.
4. Turn on power to the cabinet.

MODULE REPLACEMENT PROCEDURES

CAUTION	**It is strongly recommended that all power (cabinet, I/O, etc.) be turned off before doing any termination module wiring. Failure to do so could result in equipment damage. Do not apply power until all connections are verified.**
ATTENTION	**Il est fortement recommand, que toutes les alimentations (armoire, E/S, etc.) soient coupées avant d'effectuer quelque raccord que ce soit sur un carte de raccordement. Un manquement à ces instructions pourrait causer des dommage à l'équipement. Ne pas rebrancher les alimentations avant d'avoir vérifié tous les raccordements.**

If you determine that the IMP termination module is faulty, replace it with a new one. ***Do not*** try to repair the module; replacing components may affect the module performance and certification. When replacing a termination module, observe the special handling guidelines listed in Section 2.

NOTES:

1. Turn off power to the field devices before removing the RS-232-C cables from the IMP termination module.

2. When replacing a termination module, verify that the fuse is installed and the jumper settings on the replacement termination module are the same as the failed termination module.

Follow Steps 1 through 10 to replace the termination module.

1. Pull the termination module out of the termination mounting unit (TMU) so that the RS-232-C and power cables are accessible.

2. Turn off power to the cabinet and disconnect the +24 VDC, common and ground wiring from the termination module. Mark the cables according to their terminal assignment as you remove them.

3. If there is a serial link to a station termination module, disconnect the serial link from TB4 and TB5. Mark the cables according to their terminal assignment as you remove them. The NIMP02 module does not have a serial link connection.

4. If there is a redundant termination module (an NIMP01 and an NIMP02 module), disconnect the ribbon cables from the sockets on the faulty termination module. Mark the cables according to their connector assignments as you remove them.

5. Remove the RS-232-C cables from the DB-9 connectors on the faulty termination module. Mark the cables according to their connector assignments as you remove them.

6. When all cables are removed from the termination module, pull it out of the TMU unit.

7. Align the replacement termination module with the guide rails of its assigned slot in the TMU unit.

8. Partially insert the replacement termination module and connect the RS-232-C cables, power wiring, serial link and ribbon cable.

9. After all cables and wires have been replaced, slide the termination module into the TMU unit until its card edge seats in the card edge connector of the termination module cable on the backplane of the TMU unit.

10. Return power to the computer, modem or diagnostic terminal. Return power to the cabinet containing the termination module.

Table 4-1. Recommended Spare Parts List

Description	Part Number
Fuse, 1.0 A, 250 VDC	194776A11001
Jumper	1946984A1

SECTION 5 - SUPPORT SERVICES

INTRODUCTION

Bailey Controls Company is ready to help in the use, application and repair of its products. Contact the nearest sales office to make requests for sales, applications, installation, repair, overhaul and maintenance contract services.

REPLACEMENT PARTS AND ORDERING INFORMATION

When making repairs, order replacement parts from a Bailey Controls Company sales office. Provide the following information:

1. Part description, part number and quantity.

2. Model and serial numbers (if applicable).

3. Bailey instruction manual number, page number and reference figure that identifies the part.

Order parts without commercial descriptions from the nearest Bailey Controls Company sales office.

TRAINING

Bailey Controls Company has a modern training facility available for training your personnel. On-site training is also available. Contact a Bailey Controls Company sales office for specific information and scheduling.

TECHNICAL DOCUMENTATION

Additional copies of this manual, or other Bailey Controls Company manuals, can be obtained from the nearest Bailey Controls Company sales office at a reasonable charge.

APPENDIX A - IMMFP01 AND IMMFP02 MULTI-FUNCTION PROCESSOR

INTRODUCTION

The IMMFP01 and IMMFP02 Multi-Function Processor Modules have two configurable dipswitches and five jumpers. Figure A-1 shows the dipswitch and jumper locations. The dipswitches have eight positions. Dipswitch SW3 sets the module address. Dipswitch SW4 sets the module options and special operations. Tables A-1, A-2, and A-3 list the dipswitch settings.

Jumpers J1 through J4 are factory set with pin one and pin two jumpered. Do not change J1 through J4 jumper settings. Jumper J5 disconnects the -30 VDC supplied in earlier Network 90 systems from the MFP module. Jumper J5 is factory set with pin one and pin two jumpered. This setting allows the module to function in systems with Network 90 power (-30 VDC supplied to modules). Connect pin two and pin three together for proper Controlway operation. The two unlabeled jumper pins located at the front of the board are for Bailey Controls Company development personnel usage only. Do not jumper these pins.

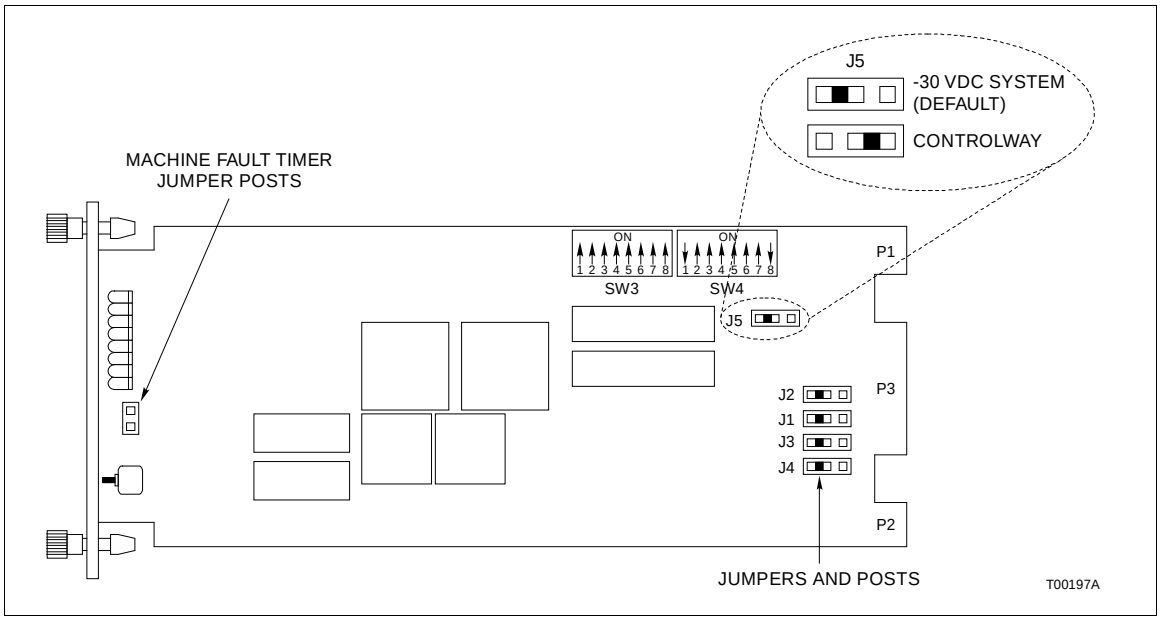

Figure A-1. IMMFP01/02 Module Layout

Table A-1. IMMFP01/02 Dipswitch SW3 Module Address Settings

Address Example	Dipswitch Position (Binary Value)							
	1 (128)	2 (64)	3 (32)	4 (16)	5 (8)	6 (4)	7 (2)	8 (1)
7	Y	0	X	0	0	1	1	1
15	Y	0	X	0	1	1	1	1
31	Y	0	X	1	1	1	1	1

NOTES:
0 = CLOSED or ON, 1 = OPEN or OFF.
1 Y = 0 for normal operation, 1 for special operations (Table A-3).
2.X = 0 for Controlway (1 Mbaud), 1 for module bus (83.3 kbaud).
3.Position 2 is reserved. Do not change the setting.

Table A-2. IMMFP01/02 Dipswitch SW4 Option Settings

Position	Setting	Function
1	0	Perform special operations.
	1	Inhibit special operations. Refer to Table A-3.
2	0	Inhibit on-line configuration.
	1	Perform on-line configuration.
3	0	Perform NVRAM checksum routine.
	1	Inhibit NVRAM checksum routine. This setting is used by development personnel and should never be used for normal operation. The checksum provides additional module integrity and should be used whenever the module is controlling a process.
4	0	Perform ROM checksum routine.
	1	Inhibit ROM checksum routine. This setting is used by development personnel and should never be used for normal operation. The checksum provides additional module integrity and should be used whenever the module is controlling a process.
5	0	Reserved for future use.
6	0	Normal.
	1	Compact configuration. Moves configured blocks to the top of NVRAM which moves free space to the bottom (this is known as compacting). Leave switch OPEN and insert module into MMU. When front panel LEDs 1, 2 and 4 are ON, remove the module, put the switch in the CLOSED position and insert the module. The MFP goes into the configure mode and compacts the configuration.
		Leaving this option enabled causes the configuration to be compacted every time the module is reset, thereby increasing the start-up time. This increase can be substantial if the configuration is large. Therefore, do not leave this option enabled longer than necessary.
7	0	Normal.
	1	Initialize NVRAM (erase configuration) - leave switch OPEN and insert the module into the MMU. When front panel LEDs 1, 2 and 4 are ON, remove the module, put the switch in the CLOSED position and insert the module. The module is now ready to be configured. This switch must be CLOSED for normal operation.
8	0	Primary MFP module.
	1	Redundant MFP module. When redundancy is used, positions 1 through 7 on the redundant MFP module are set the same as the primary MFP module. Position 8 is set to 0 for the primary MFP module and to 1 for the secondary MFP module.

NOTE:0 = CLOSED or ON, 1 = OPEN or OFF.+

Table A-3. IMMFP01/02 Dipswitch SW4 Special Operation Settings

Special Operation	Dipswitch Position (Binary Value)								Description
	1 (128)	2 (64)	3 (32)	4 (16)	5 (8)	6 (4)	7 (2)	8 (1)	
0	1	0	0	0	0	0	0	0	Reserved. Do not use. If you use this setting, your module may not operate properly.
1	1	0	0	0	0	0	0	1	Reserved for future option.
2	1	0	0	0	0	0	1	0	Initialize NVRAM configuration space.
3	1	0	0	0	0	0	1	1	Reserved. Do not use. If you use this setting, your module may not operate properly.
4	1	0	0	0	0	1	0	0	INFI-NET protocol enable. This allows the MFP module to take advantage of INFI-NET/Superloop capabilities.
5	1	0	0	0	0	1	0	1	Permit segment modification. Allows change to segment scheme configured with function code 82, specification S1.
6	1	0	0	0	0	1	1	0	Enable time stamping. This operation instructs the MFP module to generate time information with point data. It is applicable only to INFI-NET/Superloop systems.
7	1	0	0	0	0	1	1	1	MPI recognition flag.

NOTE:0 = CLOSED or ON, 1 = OPEN or OFF.+

APPENDIX B - IMMFP03 MULTI-FUNCTION PROCESSOR

INTRODUCTION

The IMMFP03 Multi-Function Processor Module has four configurable dipswitches, one socket and five jumpers. Each dipswitch has eight positions. Figure B-1 shows the location of dipswitches and jumpers on the multi-function processor (MFP) circuit board. Dipswitch UUB0 sets the module address, bus speed and operation mode (normal/diagnostic). Dipswitch UMB1 sets module options and enables special operations. Tables B-1 through B-6 list the dipswitch setting descriptions.

The HW SETUP socket defines the number of SRAM banks installed and selects wait states for ROM, NVRAM and SRAM. Table B-7 shows the jumper settings for the HW SETUP socket.

Table B-8 shows the jumper settings. Jumpers J1, J2, J4 and J5 define module functions and operation. Their settings:

- Determine if the diagnostic RS-232-C ports operate as DCE or DTE.
- Define the density of the SRAM device installed on the module.
- Enable the machine fault timer (MFT).
- Disengage -30 VDC from the module when installing it in a module mounting unit (MMU) that uses -30 VDC.

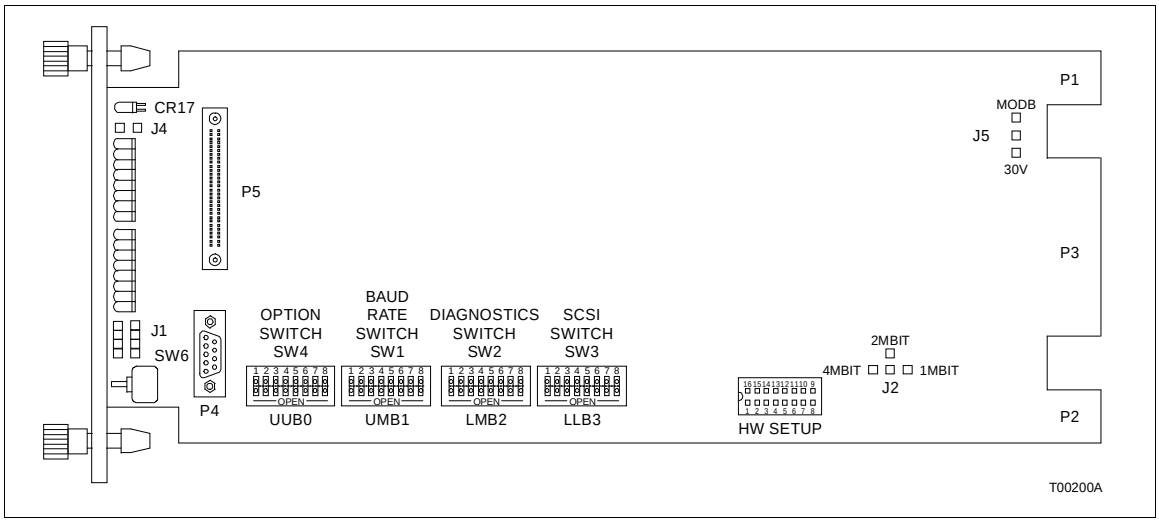

Figure B-1. IMMFP03 Module Layout

Table B-1. IMMFP03 Dipswitch UUB0 Module Address Settings

Address Example	Dipswitch Position (Binary Value)							
	1 (128)	2 (64)	3 (32)	4 (16)	5 (8)	6 (4)	7 (2)	8 (1)
7	Y	0	X	0	0	1	1	1
15	Y	0	X	0	1	1	1	1
31	Y	0	X	1	1	1	1	1

NOTES:
0 = CLOSED or ON, 1 = OPEN or OFF.
1.Y = 0 for normal operation, 1 for special operations (Table B-3).
2.X = 0 for Controlway (1 Mbaud), 1 for module bus (83.3 kbaud).
3.Position 2 is reserved. Do not change the setting.+

Table B-2. IMMFP03 Dipswitch UMB1 Options Settings

Position	Setting	Function
1	0	Disable special operations.
	1	Enable special operations. Refer to Table B-3.
2	0	Disable on-line configuration.
	1	Enable on-line configuration.
3	0	Enable NVRAM checksum routine.
	1	Disable NVRAM checksum routine. This setting is used by development personnel and should never be used for normal operation. The checksum provides additional module integrity and should be used whenever the module is controlling a process.
4	0	Enable ROM checksum routine.
	1	Disable ROM checksum routine. This setting is used by development personnel and should never be used for normal operation. The checksum provides additional module integrity and should be used whenever the module is controlling a process.
5	0	Enable file system check.
	1	Disable file system check.
6	0	Normal.
	1	Compact configuration. Moves configured blocks to the top of NVRAM which moves free space to the bottom (this is known as compacting). Leave switch OPEN and insert module into MMU. When front panel LEDs 1, 2 and 4 are ON, remove the module, put the switch in the CLOSED position and insert the module. The MFP goes into the configure mode and compacts the configuration. Leaving this option enabled causes the configuration to be compacted every time the module is reset, thereby increasing the start-up time. This increase can be substantial if the configuration is large. Therefore, do not leave this option enabled longer than necessary.
7	0	Normal
	1	Initialize NVRAM (erase configuration) - leave switch OPEN and insert the module into the MMU. When front panel LEDs 1, 2 and 4 are ON, remove the module, put the switch in the CLOSED position and insert the module. The module is now ready to be configured. This switch must be CLOSED for normal operation.
8	0	Primary MFP module.
	1	Redundant MFP module. When redundancy is used, positions 1 through 7 on the redundant MFP module are set the same as the primary MFP module. Position 8 is set to 0 for the primary MFP module and to 1 for the secondary MFP module.

NOTE:0 = CLOSED or ON, 1 = OPEN or OFF.

Table B-3. IMMFP03 Dipswitch UMB1 Special Operation Settings

Special Operation	Dipswitch Position (Binary Value)								Description
	1 (128)	2 (64)	3 (32)	4 (16)	5 (8)	6 (4)	7 (2)	8 (1)	
0	1	0	0	0	0	0	0	0	Force module to configure mode.
1	1	0	0	0	0	0	0	1	Reserved for future option.
2	1	0	0	0	0	0	1	0	Initialize NVRAM configuration space.
3	1	0	0	0	0	0	1	1	Reserved. Do not use. If you use this setting, your module may not operate properly.
4	1	0	0	0	0	1	0	0	INFI-NET protocol enable. This allows the MFP module to take advantage of INFI-NET/Superloop capabilities.
5	1	0	0	0	0	1	0	1	Permit segment modification. Allows change to segment scheme configured with function code 82, specification S1.
6	1	0	0	0	0	1	1	0	Enable time stamping. This operation instructs the MFP module to generate time information with point data. It is applicable only to INFI-NET/Superloop systems.

NOTE:0 = CLOSED or ON, 1 = OPEN or OFF.+

Table B-4. IMMFP03 Dipswitch LMB2 Option Settings

Position	Setting	Function
1	0	Enable SCSI halt on failure (default setting).
	1	Disable SCSI halt on failure.
2	0	Not used. Do not change setting.

NOTE:0 = CLOSED or ON, 1 = OPEN or OFF.+

Table B-5. IMMFP03 Dipswitch LMB2 SCSI Bus Address Settings

Address	Dipswitch Position (Binary Value)					
	3 (32)	4 (16)	5 (8)	6 (4)	7 (2)	8 (1)
7	0	0	0	1	1	1

NOTE:0 = CLOSED or ON, 1 = OPEN or OFF.+

Table B-6. IMMFP03 Dipswitch LLB3 Option Settings

Position	Setting	Function	Default Setting
1	—	Not used.	1
2			
3			
4			
5	0	Disable module mounting unit.	1
	1	Enable module mounting unit.	
6	—	Not used.	0
7	0	Disable data cache.	1
	1	Enable data cache.	
8	0	Disable instruction cache.	1
	1	Enable instruction cache.	

NOTE:0 = CLOSED or ON, 1 = OPEN or OFF.

Table B-7. HW SETUP Socket Settings

Socket Setting	Description
Socket 1 - 16	Insert jumper for IMMFP03 firmware revision E.0. Do not jumper for all other revisions.
Socket 2 - 15	Insert jumper for IMMFP03 firmware revision E.1 and later. Do not jumper for all other revisions.
Socket 3 - 14	Reserved for future use. Do not jumper sockets.
Socket 4 - 13	
Socket 5 - 12	
Socket 6 - 11	
Socket 7 - 10	
Socket 8 - 9	

Table B-8. IMMFP03 Jumper Settings for J1, J2, J4 and J5

Jumper	Setting	Function
J1[1]	Vertical	Sets the RS-232-C diagnostic port to operate as DCE.
	Horizontal	Sets the RS-232-C diagnostic port to operate as DTE.
J2	4-3	1 Mbit SRAM device (128k x 8).
	4-2	2 Mbits SRAM device (256k x 8).
	4-1	4 Mbits SRAM device (512k x 8).
J4	Open	MFT disable jumper. This jumper must remain open for normal operation.
J5	30 VDC	Disconnects Controlway channel B for operation in MMUs that have -30 VDC (early Network 90).
	MODB	Connects Controlway channel B for operation in MMUs that have Controlway capabilities.

NOTE:
1.This feature is used by Bailey service personnel. The J1 setting does not affect the module during normal operation.

APPENDIX C - IMMPI01 AND IMMPI02 MULTI-FUNCTION PROCESSOR INTERFACE

INTRODUCTION

The multi-function processor interface (MPI) module has two sets of jumpers that select RS-485 handshake signals (RTS/CTS). Figure C-1 shows the jumper locations on the MPI circuit board. Jumpers J1 and J2 must be set as shown in Figures C-2 and C-3.

NOTE: Figure C-1 shows the IMMPI02 auxiliary I/O card. The IMMPI01 auxiliary I/O card does not have a hard disk drive.

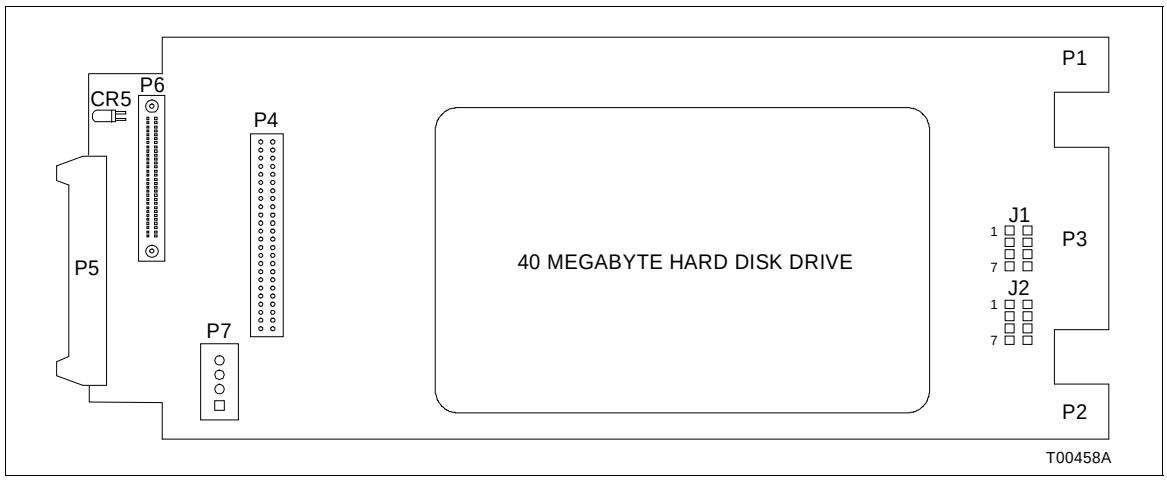

Figure C-1. MPI Module Layout

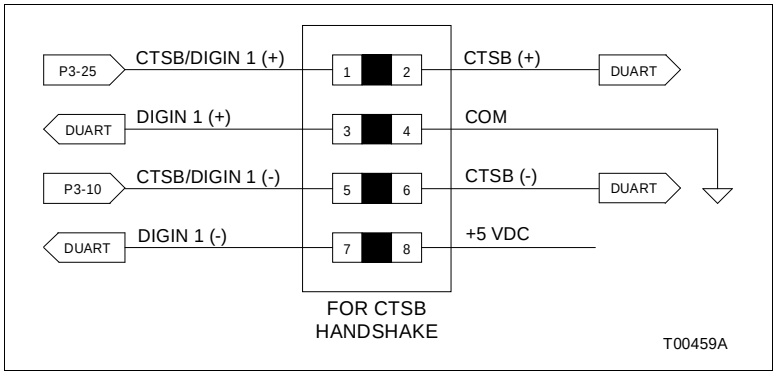

Figure C-2. MPI J1 Jumper Setting

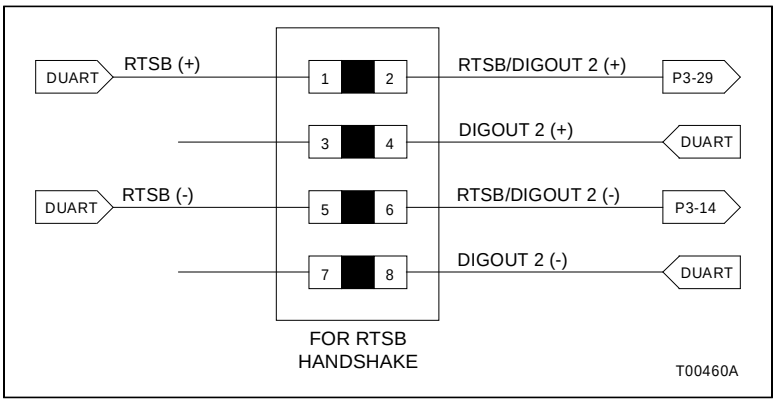

Figure C-3. MPI J2 Jumper Setting

APPENDIX D - INIIT02 INFI-NET TO INFI-NET TRANSFER MODULE

INTRODUCTION

Two dipswitches must be set for the INIIT02 INFI-NET to INFI-NET Transfer Module. The dipswitches set the module operating characteristics. Figure D-1 shows the board layout. Tables D-1 and D-2 explain the dipswitch settings. Jumpers J1 through J4 are factory set. Do not change the jumper settings.

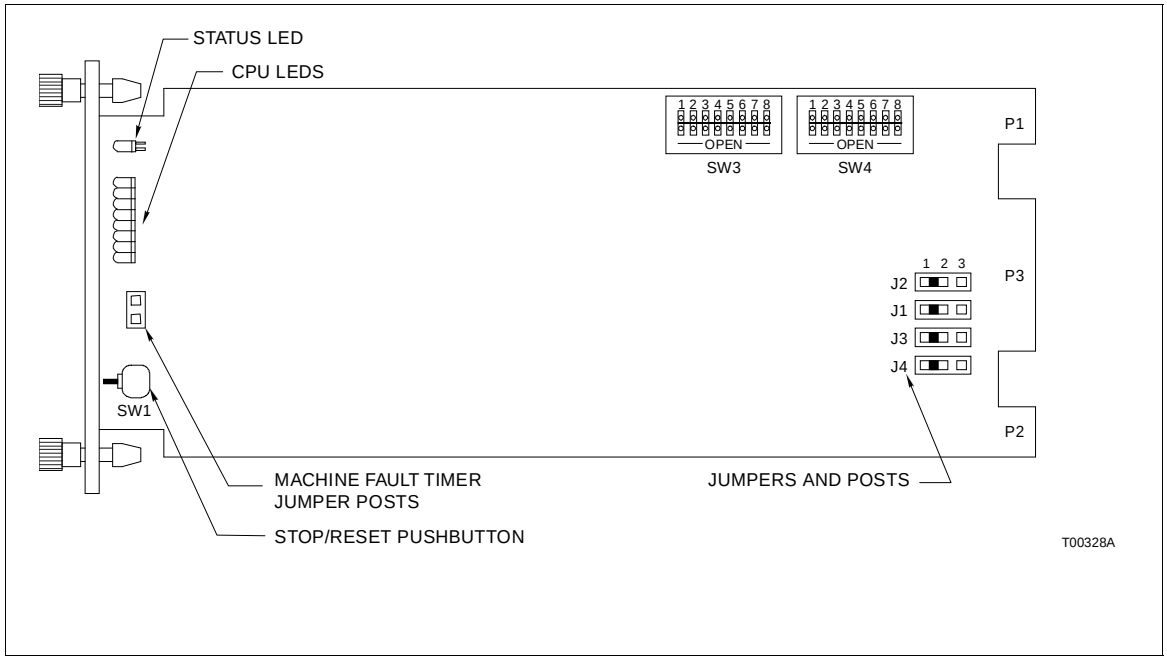

Figure D-1. INIIT02 Module Layout

Table D-1. INIIT02 Dipswitch SW4 Options Settings

Position	Setting	Function
1	0	ROM checksumming enabled.
	1	ROM checksumming disabled.
2	0	RS-232-C port in DCE mode.
	1	RS-232-C port in DTE mode.
3	0	Equipment select output not energized.
	1	Equipment select output energized.

Table D-1. INIIT02 Dipswitch SW4 Options Settings (continued)

Position	Setting	Function
4	0	Port 2 is a data port.
	1	Port 2 is a diagnostic port. If port 2 is connected to a remote INIIT02 (port) module, disconnect it before enabling it as a diagnostic port. Failure of all serial link communication may result if this precaution is not observed.
5/6	0/0	Diagnostic port baud rate is 1.2 kbaud.
	0/1	Diagnostic port baud rate is 2.4 kbaud.
	1/0	Diagnostic port baud rate is 9.6 kbaud.
	1/1	Diagnostic port baud rate is 19.2 kbaud.
7	0	Do not initialize NVRAM.
	1	Initialize NVRAM.
8	0	Not used.

NOTE:0 = CLOSED or ON, 1 = OPEN or OFF.

Table D-2. INIIT02 Dipswitch SW3 Settings

Position	Setting	Function
1	0	Normal operation.
	1	Test/diagnostic mode.
2	0	Not used.
3	0	Controlway speed is 1 Mbaud.
	1	Module bus speed is 83.3 kbaud.
4	0	Not used.
5	0	NVRAM dump on crash disabled (no dump).
	1	NVRAM dump on crash enabled (dump on crash).
6	0	Both rings on same time base.
	1	Separate time bases on rings.
7^	0	No redundant module.
	1	Redundant module configured.
8	0	Controlway address 0.
	1	Controlway address 1.

NOTE:0 = CLOSED or ON, 1 = OPEN or OFF.

APPENDIX E - INICT03 INFI-NET TO COMPUTER TRANSFER MODULE

INTRODUCTION

The INICT03 INFI-NET to Computer Transfer Module consists of one circuit board. The board has four dipswitches and four jumpers. The dipswitches select module operation options, serial port communication characteristics and the baud rate. Figure E-1 shows the dipswitch locations. Tables E-1 through E-5 describe the various dipswitches and jumpers.

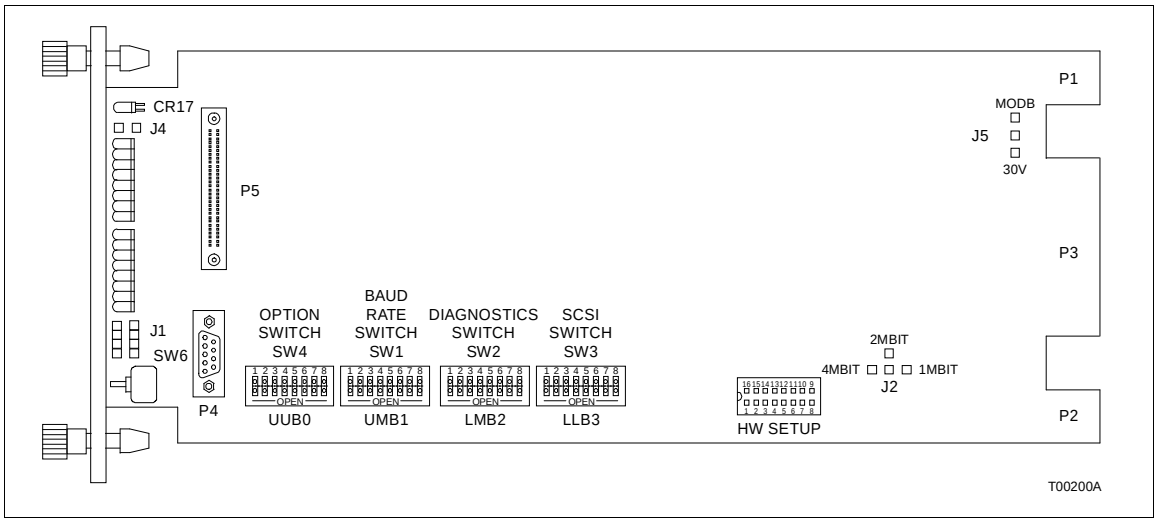

Figure E-1. INICT03 Module CPU Board Layout

Table E-1. INICT03 Dipswitch UUB0 Options Settings

Position	Setting	Function
1	0	ROM checksumming enabled.
	1	ROM checksumming disabled.
2/3	0/0	8 data bits, 1 stop bit, no parity.
	0/1	8 data bits, 1 stop bit, even parity.
	1/0	8 data bits, 1 stop bit, odd parity.
	1/1	8 data bits, 2 stop bits, no parity.
4	0	Port 1 option serial port to host.
	1	Port 1 utility option. If this option is selected, port 1 data characteristics are automatically set to 8 data bits, 1 stop bit, no parity. Otherwise, port 1 data characteristics are set by dipswitch positions 2 and 3.
5	0	Modem password protection disabled.
	1	Modem password protection enabled.

Table E-1. INICT03 Dipswitch UUB0 Options Settings (continued)

Position	Setting	Function
6	0	Port addressing mode disabled.
	1	Port addressing mode enabled. When this option is enabled, the ICT module will expect all commands from the host to send the port address configured through the UTILITIES as the first character of each command.
7	0	Checksumming option disabled.
	1	Checksumming option enabled. When this option is enabled, the ICT module will expect all commands from the host to include a checksum byte as the last character before the carriage return. The ICT module includes a checksum in each reply.
8	0	Not used.

NOTE:0 = CLOSED or ON, 1 = OPEN or OFF.

Table E-2. INICT03 Dipswitch UMB1 Baud Rate Settings

Baud Rate	Terminal Port 1 Position				Printer Port 2 Position				Baud Rate	Terminal Port 1 Position				Printer Port 2 Position			
	1	2	3	4	5	6	7	8		1	2	3	4	5	6	7	8
50.0	0	0	0	0	0	0	0	0	1800.0	0	0	0	1	0	0	0	1
75.0	1	0	0	0	1	0	0	0	2000.0	1	0	0	1	1	0	0	1
110.0	0	1	0	0	0	1	0	0	2400.0	0	1	0	1	0	1	0	1
134.5	1	1	0	0	1	1	0	0	3600.0	1	1	0	1	1	1	0	1
150.0	0	0	1	0	0	0	1	0	4800.0	0	0	1	1	0	0	1	1
300.0	1	0	1	0	1	0	1	0	7200.0	1	0	1	1	1	0	1	1
600.0	0	1	1	0	0	1	1	0	9600.0	0	1	1	1	0	1	1	1
1200.0	1	1	1	0	1	1	1	0	19200.0	1	1	1	1	1	1	1	1

NOTE:0 = CLOSED or ON, 1 = OPEN or OFF.

Table E-3. INICT03 Dipswitch LMB2 Diagnostics Settings

Position	Setting	Function
1	0	NIS handshake time-out enabled.
	1	NIS handshake time-out disabled.
2	0	NIS diagnostic disabled.
	1	NIS diagnostic enabled.
3	0	INFI-NET diagnostic utilities disabled.
	1	INFI-NET diagnostic utilities enabled.
4	0	Hardware diagnostics disabled.
	1	Hardware diagnostics enabled.
5	0	Not used.

NOTE:0 = CLOSED or ON, 1 = OPEN or OFF.

Table E-4. INICT03 Dipswitch LLB3 SCSI Port Settings

Position	Setting	Function
1	0	SCSI port disabled.
	1	SCSI port enabled.
2/3/4	0/0/0	Address = 0.
	0/0/1	Address = 1.
	0/1/0	Address = 2.
	0/1/1	Address = 3.
	1/0/0	Address = 4.
	1/0/1	Address = 5.
	1/1/0	Address = 6.
	1/1/1	Address = 7.
5	0	SCSI parity checking disabled.
	1	SCSI parity checking enabled.
6/7/8	1	Not used.

NOTE:0 = CLOSED or ON, 1 = OPEN or OFF.

Table E-5. INICT03 Jumpers J1, J2, J4 and J5 Settings

Jumper	Setting	Function
J1[1]	Vertical	Sets the RS-232-C diagnostic port to operate as DCE.
	Horizontal	Sets the RS-232-C diagnostic port to operate as DTE.
J2	4-3	1 Mbit SRAM device (128k x 8).
	4-2	2 Mbits SRAM device (256k x 8).
	4-1	4 Mbits SRAM device (512k x 8).
J4	Open	MFT disable jumper. This jumper must remain open for normal operation.
J5	30 V	Disconnects Controlway for operation in MMUs that have -30 VDC (early Network 90).
	MODB	Connects Controlway channel B for operation in MMUs that have Controlway (INFI 90).

NOTE:
1.This feature is used by Bailey service personnel. The J1 setting does not affect the module during normal operation.

Index

A

Application 1-2

C

Cables 2-6
- Applications 2-10
- Connections 2-6, 2-9, 2-10
- Installation 2-7
- Length requirements 2-10
- NKTM01 2-7
- NKTU02 2-8
- NKTU12 2-8
- Ribbon 2-10
- RS-232-C 2-10

D

Dipswitch settings
- LLB3 ..... B-4, E-3
- LMB2 ..... B-3, E-2
- SW3 ..... A-2, D-2
- SW4 ..... A-2, D-1
- UMB1 ..... B-2, B-3, E-2
- UUB0 ..... B-2, E-1

F

Features 1-3

G

Glossary of terms and abbreviations 1-4

H

How to use this manual 1-3
HW SETUP socket B-4

I

IMMPI02 module layout C-1
INFI-NET to computer transfer module E-1
INFI-NET to INFI-NET transfer module D-1
Installation 2-1
- Cables 2-7
- Fuse 2-2
- Setup/physical 2-2
- Termination module 2-11

Instruction content 1-3
Intended user 1-1
Introduction 1-1

J

Jumper settings 2-3
- IMMFP03
  - J1 ..... B-4
  - J2 ..... B-4
  - J3 ..... B-4
  - J4 ..... B-4
  - J5 ..... B-4
- IMMPI01
  - J1 ..... C-1
  - J2 ..... C-2
- IMMPI02
  - J1 ..... C-1
  - J2 ..... C-2
- INICT03
  - J1 ..... E-3
  - J2 ..... E-3
  - J4 ..... E-3
  - J5 ..... E-3
- J1 ..... 2-3, 2-4, 2-5, 2-6
  - DCE 2-4
  - DTE 2-4
  - Loopback 2-5
  - Nonhandshake 2-4
- J2 ..... 2-3, 2-4, 2-5, 2-6
  - DCE 2-4
  - DTE 2-4
  - Loopback 2-5
- J5 ..... 2-3, 2-5
- J6 ..... 2-3, 2-5
- J7 ..... 2-3, 2-5
- J8 ..... 2-3, 2-5, 2-6
- J9 ..... 2-3, 2-5, 2-6
- J10 ..... 2-3, 2-5, 2-6
- J11 2-5
- J12 2-5
- J13 2-5
- J14 2-5
- J15 2-5
- J16 2-5
- J17 2-5
- J18 2-6
- Sequence of events recorders 2-6
  - ESA Controls SER-740 2-8
  - Rochester 3800 2-6
  - Rochester ISM 2-7

Index (continued)

L

Layout
- IMMFP01 ..... A-1
- IMMFP02 ..... A-1
- IMMFP03 ..... B-1
- IMMPI01 ..... C-1
- IMMPI02 ..... C-1
- INICT03 ..... E-1
- INIIT02 ..... D-1
- Termination module 2-3

M

Maintenance schedule 3-1
Module description 1-2
Multi-function processor
- IMMFP01 ..... A-1
- IMMFP02 ..... A-1
- IMMFP03 ..... B-1

Multi-function processor interface C-1

N

Nomenclature 1-5

O

Overview 1-1

R

Reference documents 1-4
Repair 4-1
Replacement 4-1
- Fuse 4-1
- Parts and ordering information 5-1
- Termination module 4-1

S

Spare parts 4-2
Special handling 2-1
Specifications 1-5
Support services 5-1

T

Technical documentation 5-1
Training 5-1

U

Unpacking and Inspection 2-2

W

Wiring 2-11

Visit Elsag Bailey on the World Wide Web at http://www.bailey.com

Our worldwide staff of professionals is ready to meet *your* needs for process automation.
For the location nearest you, please contact the appropriate regional office.

AMERICAS
29801 Euclid Avenue
Wickliffe, Ohio USA 44092
Telephone 1-216-585-8500
Telefax 1-216-585-8756

ASIA/PACIFIC
152 Beach Road
Gateway East #20-04
Singapore 189721
Telephone 65-391-0800
Telefax 65-292-9011

EUROPE, AFRICA, MIDDLE EAST
Via Puccini 2
16154 Genoa, Italy
Telephone 39-10-6582-943
Telefax 39-10-6582-941

GERMANY
Graefstrasse 97
D-60487 Frankfurt Main
Germany
Telephone 49-69-799-0
Telefax 49-69-799-2406

Form I-E96-401A Litho in U.S.A. 793

Copyright © 1993 by Elsag Bailey Process Automation, As An Unpublished Work
® Registered Trademark of Elsag Bailey Process Automation
™ Trademark of Elsag Bailey Process Automation